March 2010

Results of Golden Lake Phosphorus Load Reduction Demonstration Project

PREPARED FOR:

City of Circle Pines

Rice Creek Watershed District

WSB & Associates, Inc.

WSB & ASSOCIATES, INC.
701 XENIA AVENUE SOUTH
SUITE 300
MINNEAPOLIS, MN 55416

WSB PROJECT NO. 1507-29

WSB & Associates, Inc.

Engineering ■ Planning ■ Environmental ■ Construction

701 Xenia Avenue South
Suite 300
Minneapolis, MN 55416
Tel: 763-541-4800
Fax: 763-541-1700

March 23, 2010

Honorable Mayor, City Council, and City Staff
City of Circle Pines
200 Civic Heights Circle
Circle Pines, MN 55014

Board of Managers and Staff
Rice Creek Watershed District
4325 Pheasant Ridge Drive NE #611
Blaine, MN 55449-4539

Re: Phosphorus Load Reduction Demonstration Project
City of Circle Pines
WSB Project No. 1507-29

To the City of Circle Pines and Rice Creek Watershed District:

Attached is the report that outlines the results of the Golden Lake Phosphorus Load Reduction Demonstration Project that was completed as a cooperative effort between the City of Circle Pines and the Rice Creek Watershed District.

We believe you will find the information developed as part of this project to be very useful in evaluating available options to meet the water quality improvement goals for Golden Lake, as well as provide more insight into the use of flocculation treatment in other applications.

Should you have any questions regarding this information, please do not hesitate to contact me at 763-287-7188

Sincerely,

WSB & Associates, Inc.

Pete R. Willenbring

Pete Willenbring, PE
Vice President

Attachment

cc: James Keinath, City of Circle Pines

RESULTS OF GOLDEN LAKE PHOSPHORUS LOAD REDUCTION DEMONSTRATION PROJECT

PREPARED FOR THE
CITY OF CIRCLE PINES AND
THE RICE CREEK WATERSHED DISTRICT

March 2010

Prepared By:

WSB & Associates, Inc.
701 Xenia Avenue South, Suite 300
Minneapolis, MN 55416
(763) 541-4800
(763) 541-1700 (Fax)

TABLE OF CONTENTS

TITLE

I. INTRODUCTION / PURPOSE OF REPORT 1

II. DESCRIPTION OF SYSTEM 2

III. ACTIVITIES COMPLETED 4

IV. FINDINGS 5

- A. Phosphorus Removal Efficiency 5
- B. Cost to Operate 5
- C. System Operation/Design Considerations 6

V. SUMMARY 8

APPENDICES:

Figures
Tables
Reference Information

I. INTRODUCTION / PURPOSE OF REPORT

This report outlines the results of the Golden Lake Phosphorus Load Reduction Demonstration Project that was undertaken as a cooperative effort between the City of Circle Pines and the Rice Creek Watershed District. The objective of the project was to study and gather additional information on the viability of using a flocculation treatment system to improve the water quality in and around Golden Lake as well as in other lakes, streams, and wetlands within the State of Minnesota.

As part of this effort, a portable flocculation treatment system was installed and operated in the summer of 2009 in an area immediately upstream of Golden Lake in the City of Circle Pines (***Figure 1***). As part of the system operation, sampling and testing of influent and effluent concentrations was undertaken, along with monitoring of flow rates and other operational parameters. Upon completion of this testing, the results were analyzed and findings were made related to pollutant removal efficiencies, the cost for removal, and suggested refinements to the system design. This information is included within this report.

II. DESCRIPTION OF SYSTEM

The Golden Lake Phosphorus Load Reduction Demonstration Project utilizes a flocculation treatment process similar to that used to treat drinking water; however, the process has been modified to treat storm water with a focus on phosphorus removal.

The process has four principal components (see ***Figure 2***). First, water to be treated is pumped from the Golden Lake Wetland to the system where liquid aluminum sulfate is added and mixed with the storm water as it enters the device. Next, the mixture of storm water and liquid aluminum sulfate is carried to a settling/contact tank where the phosphorus combines with the aluminum to form aluminum sulfate, an insoluble compound that forms a floc and settles to the bottom of the chamber. The third component of the process removes the settled floc from the bottom of the settling chamber and periodically discharges this floc to the sanitary sewer as part of the routine system operation. The fourth stage skims floatables from the treated water and reintroduces the treated water to the Golden Lake wetland in another location.

Other details related to this system design and installation are provided below:

- The system was installed in an upland area on the northeast shoreline of the Golden Lake Wetland Treatment System. The portable flocculation treatment system device was installed on a pad that was constructed immediately south of Lake Drive and west of Golden Lake Road. The location of the raw water inlet and the treated water outfall are shown on ***Figure 1*** included in ***Appendix A.***

- The Portable Flocculation Treatment System (see ***Figures 3, 4, 6-11***) has a primary contact/settling chamber that has a volume of approximately 6,000 gallons, and based on typical pumping rates, has settling/contact times ranging from 30 to 60 minutes.

- A Treatment Reagent Injection System was installed capable of introducing a flocculation reagent at a rate ranging from 2 to 85 gallons per day and at a discharge pressure ranging from 0 to 100 psi. Based on a pumping rate of 100 gallons per minute and a reagent injection rate of 85 gallons per day, this would correspond to a dosage rate of 0.6 ml of liquid aluminum sulfate per liter of water treated. (One gallon of liquid aluminum sulfate per 1,666 gallons of untreated water.)

- The flocculation sludge removal system consists of three, 8-inch diameter perforated pipes placed on the bottom of the tank. Floc that settled to the bottom of the tank in the vicinity of these perforated pipes was then periodically removed by pumping water from the bottom of the tank through these perforated pipes, and this floc/sludge slurry was then discharged to the sanitary sewer.

- Treated water was discharged from the system through a skimmed surface overflow that was installed on the down-flow side of the settling chamber.

- Both gasoline and electric pumps were utilized as part of the system testing. These pumps had the capability of pumping water through the system at a rate ranging from 75 to 150 gallons per minute.

- The untreated raw-water, inflow line consisted of a 3-inch diameter suction hose with an inlet strainer that was placed in the Golden Lake wetland in an area that had a depth of approximately 3 feet.

- Inspection ports were constructed in the roof of the treatment tank to monitor the flow rate and visually observe the effectiveness of the treatment process at suitable locations within the device.

III. ACTIVITIES COMPLETED

In order to obtain information on the design, operation, and removal efficiency of the treatment system, a number of activities and analyses were undertaken. These activities included the following:

- Constructing a Class V Aggregate base/pad for the treatment system, a raw-water, intake line, a treated water outfall line, a discharge line to the sanitary sewer, and a power feed to the portable treatment system.

- Constructing a pond in a depression adjacent to the portable treatment system to allow for more detailed visual observations and sampling of the treated water discharged from the system under various operational scenarios.

- Completing jar tests to approximate reagent dosage rates and estimate removal efficiencies.

- Operating the system at various process flow rates, monitoring the flow characteristics through the treatment chamber, and evaluating the suitability of the design as it relates to the sizing for the intake and discharge pipes.

- Installing a system of weirs and measuring devices to quantify the rates of flow for both treatment reagents and raw-water inflow.

- Collecting samples of raw untreated water and treated water, then analyzing the water for concentrations of total and ortho-phosphorus, total suspended solids, and pH.

- Completing inspections of the tank bottom and the treated water outfall to evaluate the design relative to removal of accumulated floc/sediment in the bottom of the tank and the extent to which floc could remain in suspension and be discharged from the system with the treated water.

- Operating the system at various alum-dosage feed rates to observe floc settling characteristics, removal efficiencies, and the cost-effectiveness of applying flocculation reagents at varying dosage rates.

- Submitting permit applications and receiving permits from the Metropolitan Council Environmental Services (MCES) Division that allowed for the discharge of flocculated sediment into the sanitary sewer.

- Testing of the settled floc discharged to the sanitary sewer per the terms of the MCES permit.

IV. FINDINGS

A. Phosphorus Removal Efficiency

- Based on jar tests that were undertaken to determine the most appropriate alum dosage rates, it was noted, for dosage rates between 0.2 and 0.8 ml per liter, between 60 and 90 percent of the total phosphorus and 70 to 100 percent of the ortho-phosphorus could be removed. This testing was completed without the use of any buffering reagent to optimize pH.

- During operational testing of the system (see ***Table 1***), based on dosage rates ranging from 0.25 ml/liter to 0.5 ml/liter, total phosphorus removal ranged from 48 to 82 percent.

- Based on a dosage rate of 0.5 ml/liter, an 82 percent total phosphorus removal efficiency was observed, which reduced the phosphorus concentration in the water from 170 to 30 ppb. A similar removal percentage (76 percent) was also observed utilizing this dosage rate but at a lower process flow rate.

- Operational monitoring for ortho-phosphorus removal (see ***Table 2***) indicated for liquid aluminum sulfate dosage rates ranging from 0.125 ml/liter to 0.5 ml/liter; removal efficiencies ranged from 50 percent to 100 percent.

- Based aluminum sulfate dosage rates ranging from 0.25 ml/liter to 0.5 ml/liter total suspended solids removal was observed to range from 15 to 100 percent (see ***Table 3***).

B. Cost to Operate

Table 4 in ***Appendix B*** provides information on the anticipated cost to operate this portable flocculation treatment system. The cost estimates are based on an analysis of two scenarios, one utilizes a lower alum-dosage feed rate, which has lower total phosphorus removal, and one utilizing a higher dosage rate, higher reagent costs, but also a higher phosphorus removal rate. Estimates for power usage, capital, and personnel cost to operate this system are also shown.

Based on this analysis, it is estimated the cost to operate this system will range from $1,225 to $1,580 dollars/per pound of phosphorus removal. A comparison of this cost to other BMPs based on a document entitled, “A Public Works Perspective on the Cost versus Benefit of a Specific Storm Water Management Practices,” is provided on ***Table 5***.

C. System Operation/Design Considerations

- Based on the treatment tank having a 6,000 gallon storage capacity, a treatment pumping rate of between 100 and 150 gallons per minute, and 40 to 60 minutes of contact time, it was noted that some short circuiting of the flow does occur and will likely occur to some extent even under the most optimal conditions. It was also noted that some thermal stratification might be occurring, and installation of additional baffles in the tank would be beneficial. Furthermore, it was noted that a process pumping rate of 100 gallons per minute instead of higher pumping rates generally allowed for greater percent removal efficiencies but not necessarily greater operational efficiencies (cost/lb of phosphorus reviewed may be higher.)

- The surface skimming system on the downstream side of the tank worked well, but the discharge weir could be reduced to increase the distance the water must travel prior to it being discharged from the system.

- The system of quick disconnects for hoses that serve to either bring water into the system, discharge treated water, or remove flocculant from the bottom of the tank were found to be versatile and useful in this demonstration project.

- Based on the system having a treatment pumping rate ranging from 75 to 150 gallons per minute, the metering pump that was installed, which has a range of flow rates from between 2 and 85 gallons per day, is appropriately sized to provide dosage rates needed to optimally treat storm water in this area. It was observed, however, that the dosage rate must be optimized based on the specific quality and alkalinity of the water treated.

- When appropriate dosage rates and retention times were utilized, the treated water discharged from the system had little floc present. However, the potential for some floc to be discharged from the system will always remain, particularly, during system start-up, and during periods when refinement of the dosage rate is being undertaken. While infrequent discharge of the floc should not cause a problem (in-lake treatments are routinely used where all the floc is allowed to settle to the bottom of the basin) it is recommended that the system design include utilization of a secondary contact/settling area that can be used to monitor the water treated, allow for additional floc formation and settling, and provide additional treatment contact time to increase the removal efficiencies for the process.

- It was noted that removal of floc deposited at the bottom of the tank might be enhanced by shutting off the treatment process for one hour prior to discharging the sludge to the sanitary sewer. It is recommended that this procedure be undertaken when sludge is pumped from the bottom of the tank.

- ***Tables 6 and 7*** provide information on the amount of water that was treated during the test along with volume of water that was discharged to the sanitary sewer. This can be observed from ***Table 6;*** approximately 9-acre feet of water was pumped through the system as part of this test and approximately 7,000 cubic feet (0.15 acre feet) was discharged to the sanitary sewer. It must be noted that as part of this demonstration project, significantly more water was discharged to the sanitary sewer then would normally be needed. This was to facilitate testing of the treatment process under varying dosage rates.

- As part of the MCES discharge permit, testing of the floc slurry discharged to the sanitary sewer was required. The results of this testing is provided on ***Table 8***. As can be observed from this table, the concentration of all elements of concern by MCES were well within allowable limits with the exception of pH. Testing of the floc sample at the laboratory showed the pH to be less than that allowed by MCES discharge limits. In addition, monitoring of the sludge in the tank at the time it was discharged was found too close to or slightly below the allowable limit of a pH of 5 at times during the demonstration project. For this reason, when this floc is discharged into the sanitary sewer, buffering the discharge utilizing sodium hydroxide would be warranted.

- To increase phosphorus removal efficiencies and offset observed low pH that occurs when using higher aluminum sulfate dosage rates, it is recommended that a sodium hydroxide buffer solution be incorporated into the treatment process.

- Jar tests indicate that at a sodium hydroxide dosage rate of 1 part per 10,000, the pH of the water being treated, as well as the pH of the flocculant discharged to the sanitary sewer could be maintained close to a pH of 7.

- Based on studies on the efficiency of chemical reactions of aluminum in different pH environments, phosphorus removal efficiencies could be increased by adding buffering agents. Information on this principle is included as reference information in ***Appendix C*** of this report.

- Sampling of the quality of water in the Golden Lake wetland during the demonstration project (completed on August 25, 2009) indicated the total phosphorus concentration of water in the wetland ranged from 0.24 to 0.28 ml/liter based on sampling in two locations, and the ortho-phosphorus concentration ranged from 0.06 to 0.07 ml/liter. Results of this monitoring are shown on ***Table 9***. The specific location from which this water quality information was collected is shown on ***Figure 8*** in ***Appendix A***.

V. SUMMARY

The Golden Lake Phosphorus Load Reduction Demonstration Project was undertaken to further evaluate the viability of using a flocculation process to remove phosphorus from storm water. This process was evaluated using a Portable Flocculation Treatment System that was installed to treat water from the Golden Lake wetland in Circle Pines. The demonstration project was developed to provide additional answers to a number of questions concerning the applicability of this technology to treat storm water runoff. A list of the questions and answers are provided below.

Question No. 1 What typical phosphorus removal efficiency can be anticipated utilizing an aluminum sulfate flocculation treatment process?

Answer *– With proper system operation, between 70 and 90 percent of the phosphorus in the water could be removed.*

Question No. 2 What dosage of liquid aluminum sulfate should be used in this location to achieve optimum phosphorus removal results?

Answer *– Based on the demonstration project, dosage rates ranging from 0.25 ml/liter to 0.5 ml/liter of liquid aluminum sulfate appeared to optimize removal. It was also observed that at the lower dosage rates, the removal efficiency may not be as high, but that the number of pounds of phosphorus removed per liter of liquid aluminum sulfate utilized was maximized. Higher dosage rates were observed to increase removal efficiencies and provide a higher quality effluent but at a slightly higher cost per pound of phosphorus removed. It was also noted that at higher dosage rates, there was an increased need to add a buffering compound to the process to maintain the pH at acceptable levels.*

Question No. 3 Is pH control an issue?

Answer *– A review of literature values as well as monitoring data did indicate that if higher removal of efficiencies is desired or if the flocculant is discharged to the sanitary sewer, the inclusion of a buffering agent in the process should be considered. With the introduction of a buffering agent, the theoretical maximum removal of phosphorus increases if the pH can be maintained close to 7.0. Although the cost for treatment will increase by approximately 20 percent if a buffering agent is used, an increase in removal efficiency is also anticipated which might off set a significant portion of the additional cost associated with adding a buffering agent.*

Question No. 4 Is the flocculant/sludge that is deposited in the bottom of the settling chamber suitable for discharge to the sanitary sewer?

Answer *– With the exception of pH, the characteristics of the flocculant/sludge were well below any limits set by MCES for discharge to*

the sanitary sewer. At higher aluminum sulfate dosage rates or when sludge pumping occurs at less frequent intervals, it is anticipated a buffering agent would be needed in this application to meet allowable pH levels for discharge to the sanitary sewer.

Question No. 5 What is the anticipated cost per pound of phosphorus removed for operation of this system?

Answer *– The cost per pound of phosphorus removed is dependent on the concentration of phosphorus in the untreated water, the alkalinity, the extent to which a buffer must be used to treat the water, the pumping rate and or capacity of the system, the extent to which the system is automated, and other factors. Previous studies have shown that large-scale flocculation treatment systems can remove phosphorus at costs ranging from $250 to $500 per pound. Smaller scale systems would likely have removal costs ranging from $800 to $1,500 per pound of phosphorus removed. It is anticipated that the long-term operation of this treatment system in this location could remove phosphorus at a cost of between $900 and $1,400 per pound, achieve phosphorus removal efficiencies in excess of 75 percent, and achieve a treated effluent with phosphorus concentration less than 60 ppb.*

Question No. 6 What operational considerations should be incorporated into this demonstration project in order for the system to be operated on a permanent basis?

Answer *– Permanent raw water intake and treated water discharge pipes would need to be installed to prevent short circuiting of treated water, a permanent buried sludge disposal outfall would need to be constructed and routed to the sanitary sewer manhole south of Lake Drive, and a secondary treatment pond should be constructed adjacent to the portable treatment system. This pond would serve to provide additional contact time and provide enhanced opportunities for monitoring and pH adjustment as needed. In addition, it is recommended that the ditch that is currently in place along the County Ditch 53-62 alignment be cleaned out and utilized to discharge treated water directly to Golden Lake when operational considerations warrant.*

APPENDICES

Appendix
Figures

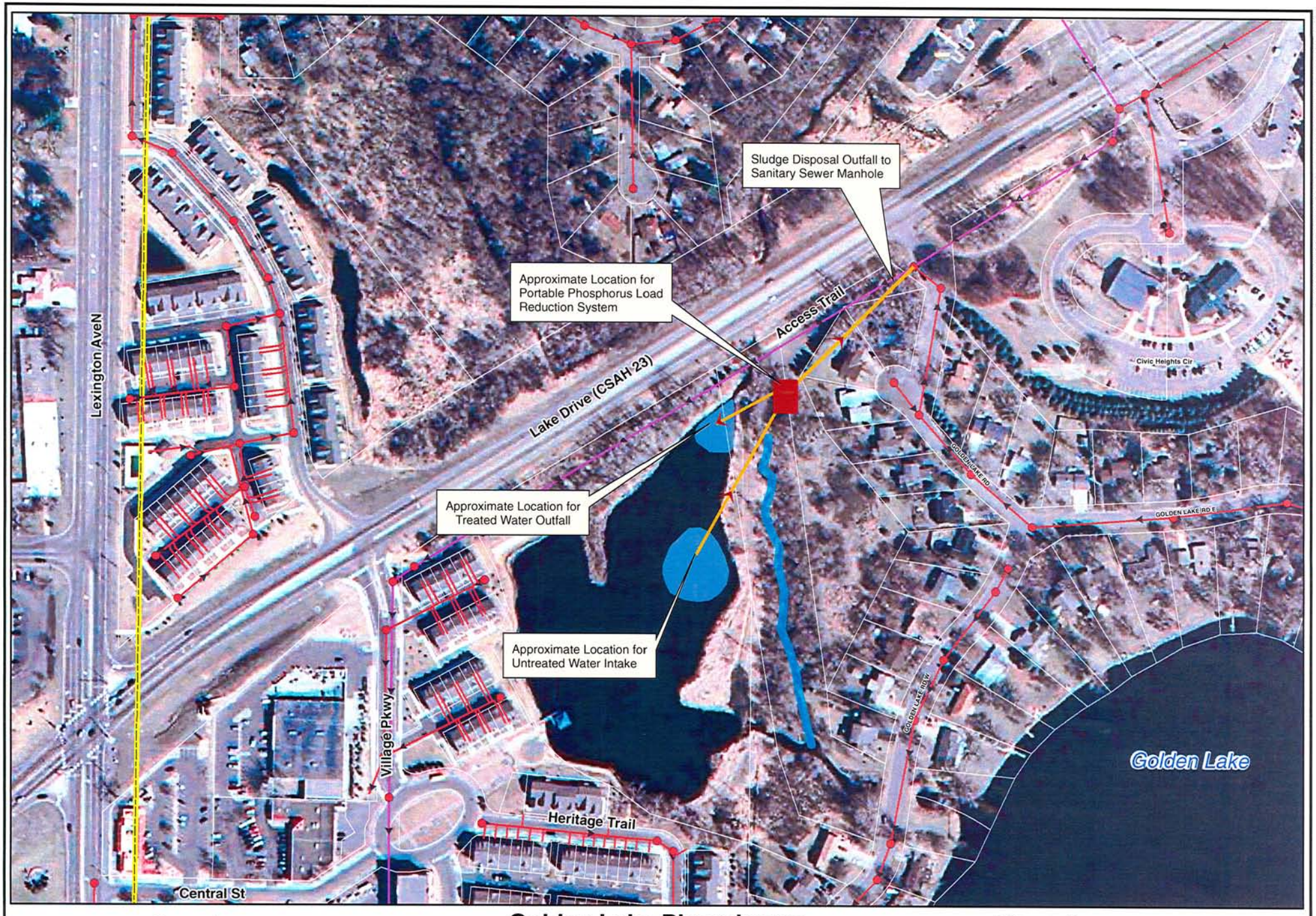

Legend

- Sanitary Manhole
- Interceptor
- Gravity Main
- Ditch

City of Circle Pines

Golden Lake Phosphorus Load Reduction Project Site Plan

Figure 1

0 125 250 Feet

N W E S

WSB & Associates, Inc.

File: K:\01507-29\GIS\Maps\WaterQuality\System_invite_3152010.mxd, Mar 15, 2010 4:14:42 PM

FLOCCULATION/SEDIMENTATION TREATMENT SYSTEM SCHEMATIC

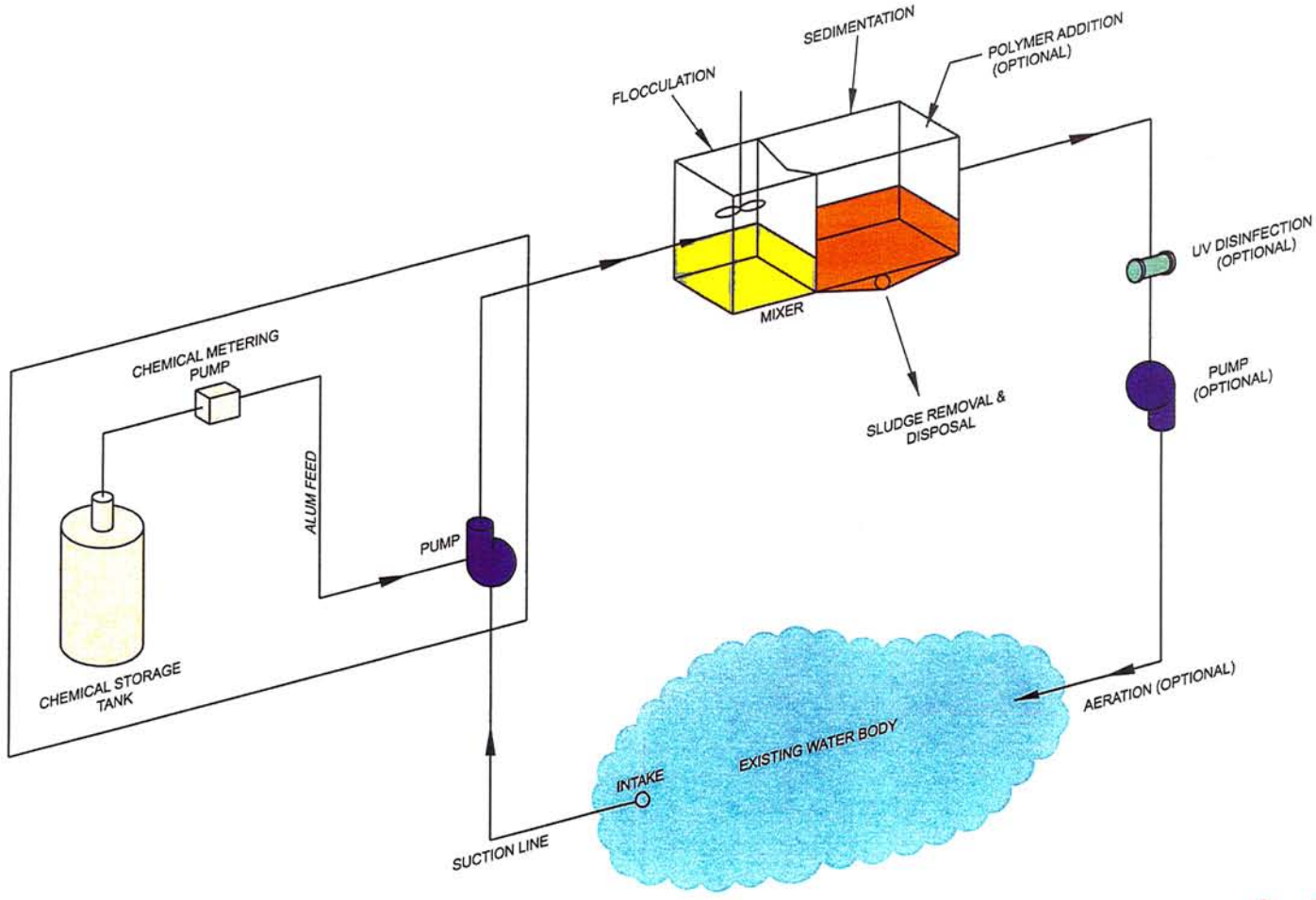

FIGURE 2

WSB & Associates, Inc.
701 Xenia Avenue South, Suite 300
Minneapolis, MN 55416
www.wsbeng.com
763-541-4800 - Fax 763-541-1700
INFRASTRUCTURE ‹ ENGINEERING ‹ PLANNING ‹ CONSTRUCTION

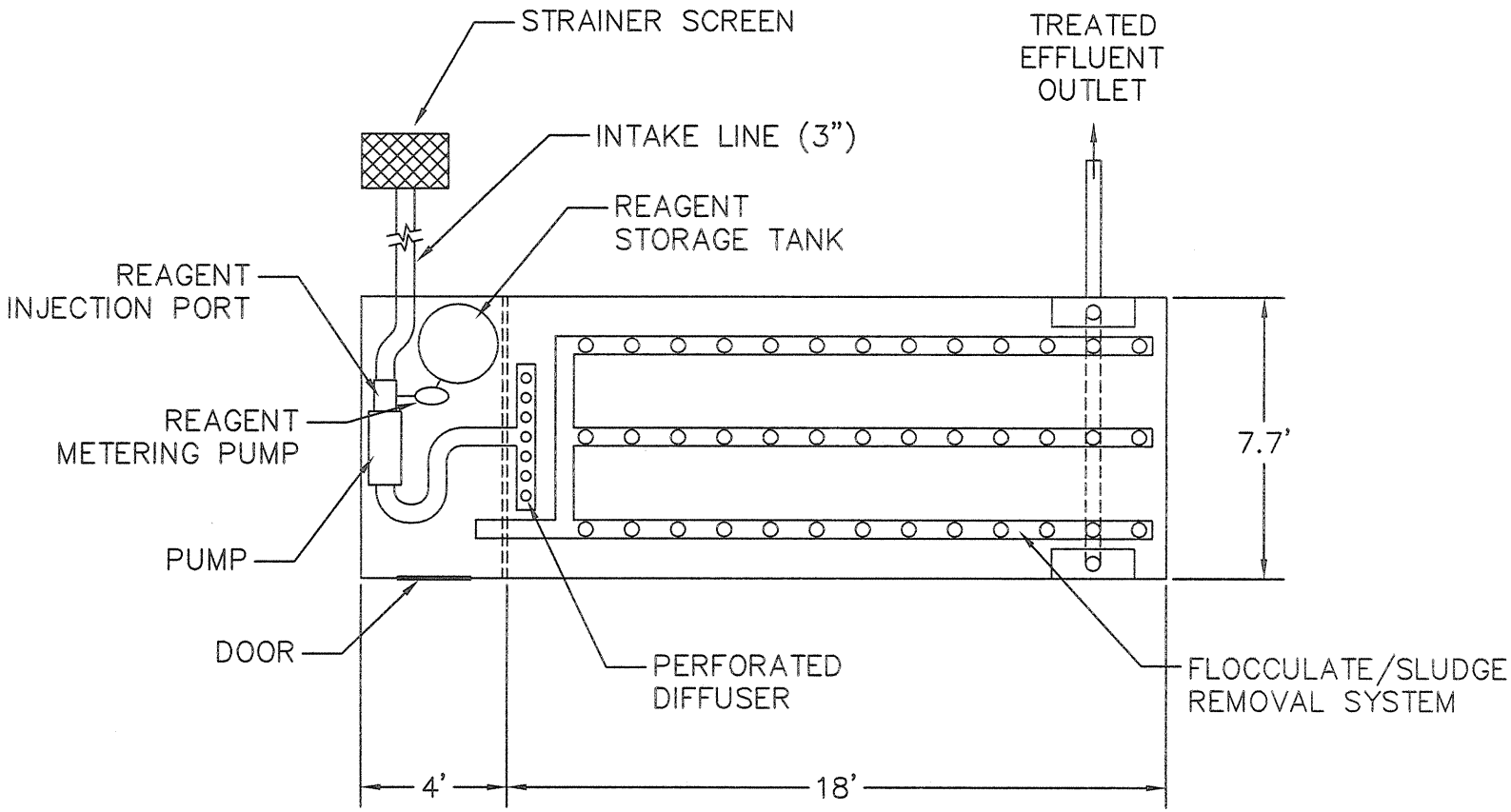

WSB & Associates, Inc.
701 Xenia Avenue South, Suite 300
Minneapolis, MN 55416
www.wsbeng.com
763-541-4800 - Fax 763-541-1700
INFRASTRUCTURE ■ ENGINEERING ■ PLANNING ■ CONSTRUCTION

PORTABLE TREATMENT SYSTEM
GOLDEN LAKE PHOSPHOROUS LOAD REDUCTION
DEMONSTRATION PROJECT

WSB Project No. 01507-290 Jan 7, 2009

PLAN VIEW
FIGURE 3

K:\01507-29\Cad\Plan\portable treatment system.dwg, Layout1, 3/19/2010 2:55:08 PM

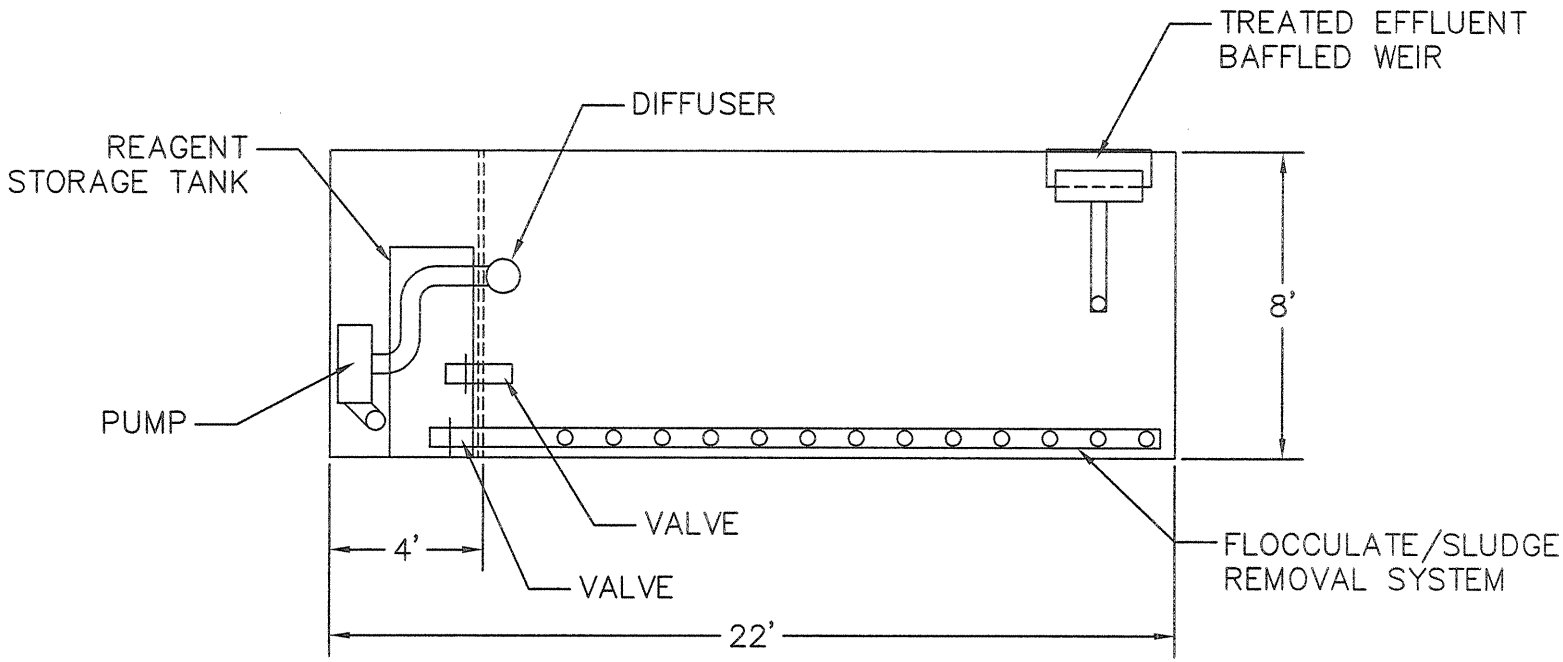

WSB & Associates, Inc.
701 Xenia Avenue South, Suite 300
Minneapolis, MN 55416
www.wsbeng.com
763-541-4800 - Fax 763-541-1700
INFRASTRUCTURE ■ ENGINEERING ■ PLANNING ■ CONSTRUCTION

PORTABLE TREATMENT SYSTEM
GOLDEN LAKE PHOSPHOROUS LOAD REDUCTION
DEMONSTRATION PROJECT

WSB Project No. 01507-290 Jan 7, 2009

PROFILE VIEW
FIGURE 4

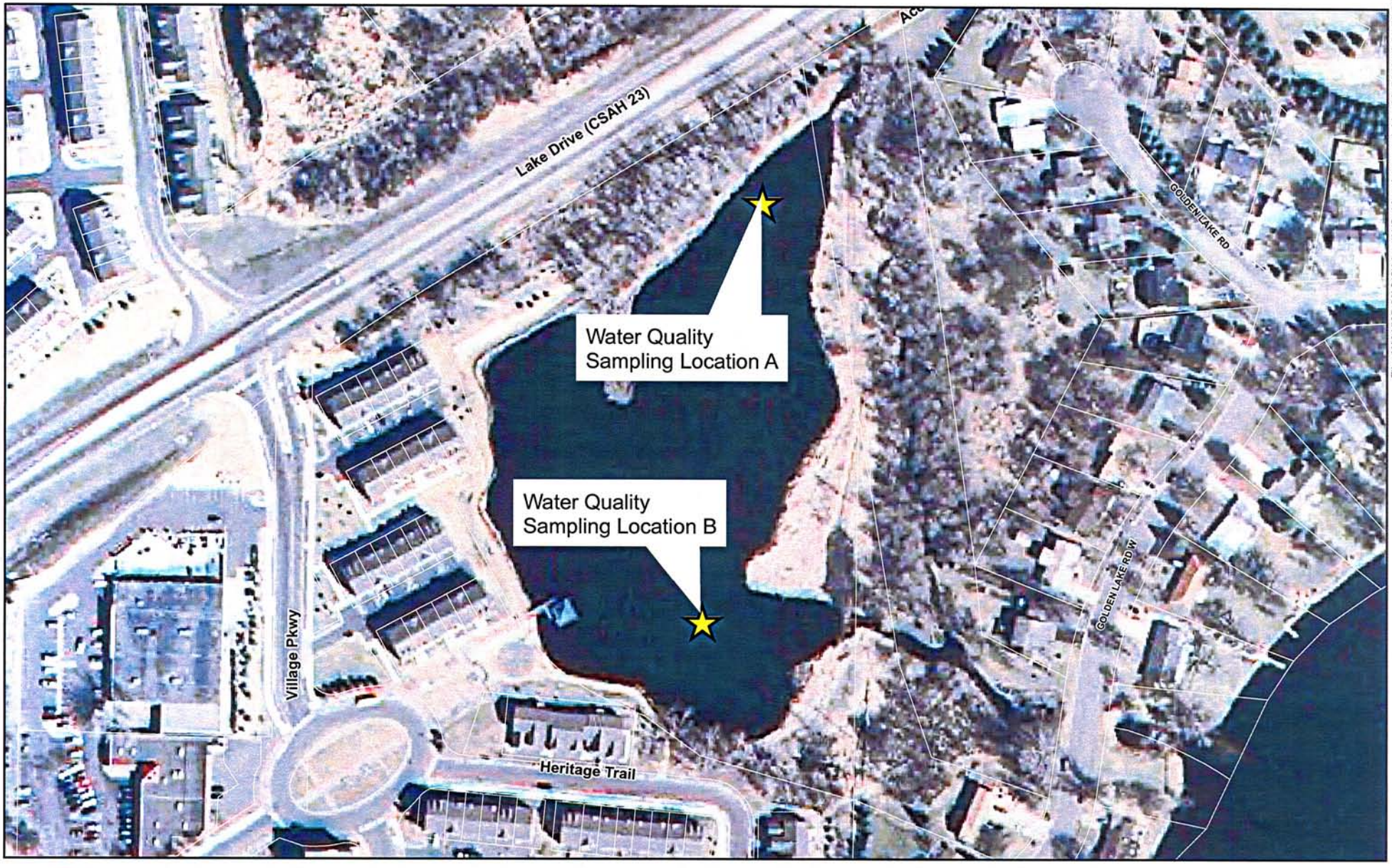

File: K:\01507-29\GIS\Maps\WQ_Mon_Locs.mxd, Mar 22, 2010 12:31:50 PM

City of Circle Pines

N W E S

0 200 Feet

Golden Lake Phosphorus Load Reduction Demonstration Project Golden Lake Wetland Water Quality Monitoring Locations

Figure 5

WSB & Associates, Inc.

Figure 6

Portable Flocculation Treatment System

Figure 7

Portable Flocculation Treatment System

Discharge Header, Flocculent Removal Header, and Skimmers

Figure 8

Portable Flocculation Treatment System

Water pump, Reagent, and Metering System

Figure 9

Portable Flocculation Treatment System

Sanitary Discharge to MCES Sewer

Figure 10

Portable Flocculation Treatment System

Treated Water Discharging into Secondary Containment Pond

Figure 11

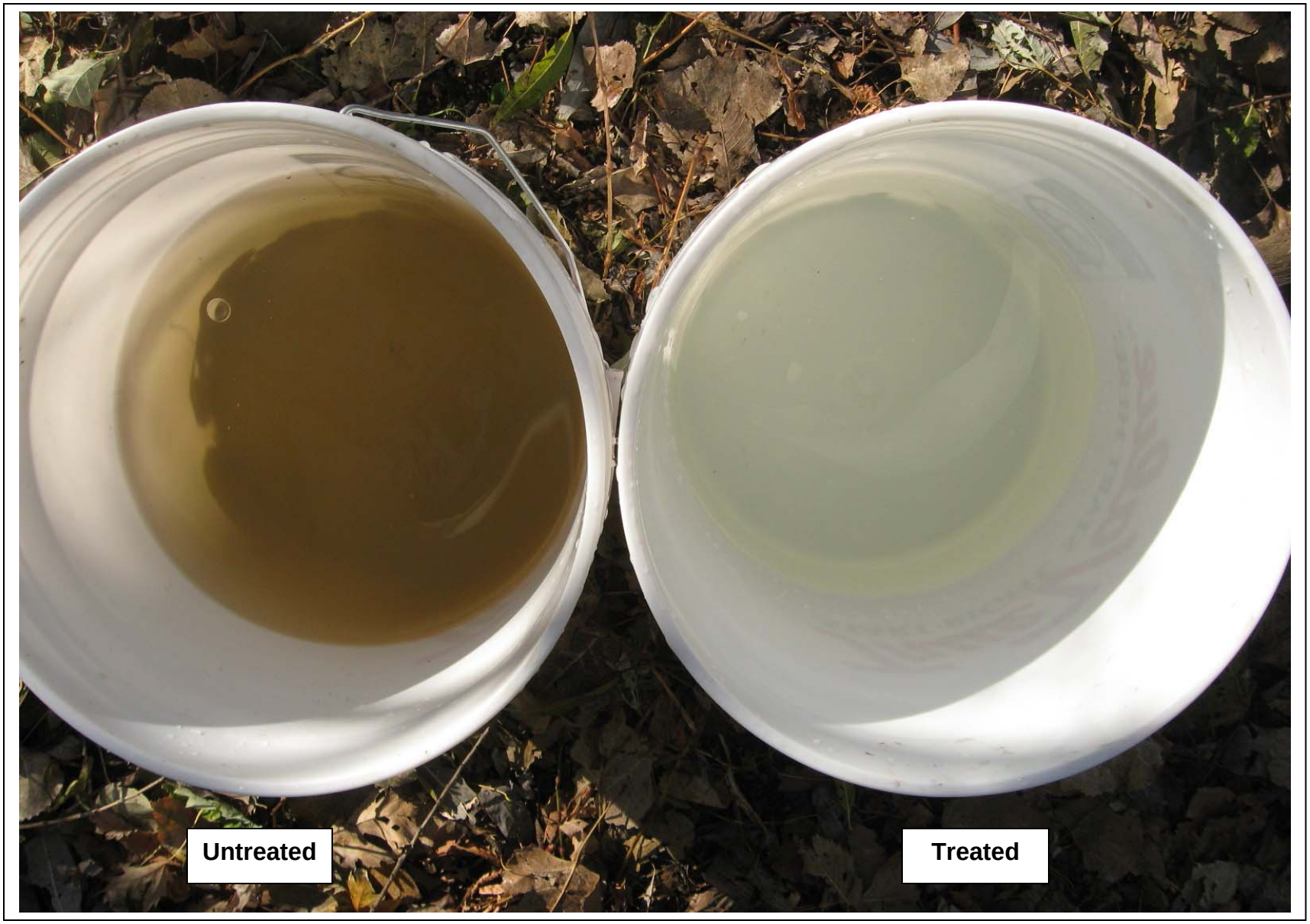

Portable Flocculation Treatment System

Comparison of Treated and Untreated Water

Appendix
Tables

City of Circle Pines Phosphorus Reduction
Demonstration Project
WSB Project No 1507-29

Table 1

MONITORING RESULTS
for
TOTAL PHOSPHORUS REMOVAL

Testing Date	Pumping Rate (gpm)	Aluminum Sulfate Dosage Ratio	Aluminum Sulfate Dosage Rate (ml/min)	Pre-Treatment Total Phosphorus (mg/L)	Post-Treatment Total Phosphorus (mg/L)	Total Phosphorus Reduction (mg/L)	Total Phosphorus Removal (Percentage)	Total Phosphorus Removal (lbs/acft)	Total Phosphorus Removal (lbs per month)
7/27/2009	80	0.5/1000	153.00	0.33	0.08	0.25	76%	0.70	7.42
7/28/2009	80	0.25/1000	77.00	0.29	0.15	0.14	48%	0.39	4.13
8/27/2009	115	0.125/1000	54.00	0.25	0.22	0.03	12%	0.08	1.26
9/9/2009	115	0.50/1000	217.00	0.17	0.03	0.14	82%	0.38	6.00
9/10/2009	115	0.038/1000	163.00	0.24	0.08	0.16	67%	0.44	6.95

* Water sample testing was performed by William Lloyd Analytical Laboratory.

City of Circle Pines Phosphorus Reduction
Demonstration Project
WSB Project No 1507-29

Table 2

MONITORING RESULTS
for
ORTHO PHOSPHORUS REMOVAL

Testing Date	Pumping Rate (gpm)	Aluminum Sulfate Dosage Ratio	Aluminum Sulfate Dosage Rate (ml/min)	Pre-Treatment Ortho Phosphorus (mg/L)	Post-Treatment Ortho Phosphorus (mg/L)	Ortho Phosphorus Reduction (mg/L)	Ortho Phosphorus Removal (Percentage)	Ortho Phosphorus Removal (lbs/acft)	Ortho Phosphorus Removal (lbs per month)
8/27/2009	115	0.125/1000	54.00	0.04	0.02	0.02	50%	0.08	1.26
9/9/2009	115	0.50/1000	217.00	0.02	0.00	0.02	100%	0.05	0.79

* Water sample testing was performed by William Lloyd Analytical Laboratory.

City of Circle Pines Phosphorus Reduction
Demonstration Project
WSB Project No 1507-29

Table 3

MONITORING RESULTS
for
TOTAL SUSPENDED SOLIDS REMOVAL

Testing Date	Pumping Rate (gpm)	Aluminum Sulfate Dosage Ratio	Aluminum Sulfate Dosage Rate (ml/min)	Pre-Treatment Total Suspended Solids (mg/L)	Post-Treatment Total Suspended Solids (mg/L)	Total Suspended Solids Reduction (mg/L)	Total Suspended Solids Removal (Percentage)	Total Suspended Solids Removal (lbs/acft)	Total Suspended Solids Removal (lbs per month)
7/27/2009	80	0.5/1000	153.00	68	11	57	84%	155	1643
7/28/2009	80	0.25/1000	77.00	10	4	6	60%	15	159
8/25/2009	115	0.25/1000	108.00	57	37	20	35%	54	853
8/27/2009	115	0.125/1000	54.00	13	11	2	15%	5	79
9/9/2009	115	0.50/1000	217.00	7	0	7	100%	19	300

* Water sample testing was performed by William Lloyd Analytical Laboratory.

City of Circle Pines Phosphorus Reduction
Demonstration Project
WSB Project No 1507-29

Table 4

MONITORING RESULTS
for
COST TO OPERATE FLOCCULENT TREATMENT SYSTEM

Pre-Treatment TP Concentration (ppb)	Post-Treatment TP Concentration (ppb)	Alum Dosage Rate (ml/liter)	Pumping Rate (gpm)	Alum Cost / Month	Floc Disposal Cost / Month	Sodium Hydroxide (pH Buffer) / Month	Monthly Electrical, Capitol, and Personal Costs	Total Monthly Operational Costs	Pounds Removed / Month	Cost / lbs of TP Removed
3.3	0.8	0.5	100	$4,300	$240	$2,000.00	$4,500.00	$11,000.00	9 lbs	$1,225.00
2.9	1.4	0.25	100	$2,150	$240	$1,000.00	$4,500.00	$7,900.00	5 lbs	$1,580.00

*** Estimated Costs**

Electricity	$500 / Month
Amortized Capital Cost	$3000 / Month
Personnel	20 Hours / Month @ $50.00 /Hour
Estimated Total Monthly Cost:	$4,500.00

* This cost is based on a pumping rate of 100 gpm. As the system size and pumping rate increases, the cost per pound of Phosphorus removed will be reduced.

Table 5

PHOSPHORUS REMOVAL COSTS FOR VARIOUS BMPs BASED ON THE MPWA PAPER

A Public Works Perspective of the Cost vs Benefit of Various Stormwater Treatment Practices

BMP No.	BMP Description	Phosphorus Removal Cost / lb.
1	NURP Basin	$1,554
2	Raingarden	$8,715
2a	Raingarden No. 2	$2,460
3	Water Reuse/Stormwater Irrigation System	$533
4	Wastewater Treatment Plant	$220
5	Flocculation - Large Scale System	$280
6	Underground Treatment Devices	$830

City of Circle Pines Phosphorus
Reduction Demonstration Project
WSB Project No 1507-29

Table 6

MONITORING RESULTS
for
WATER VOLUME TREATED DURING DEMONSTRATION PROJECT

Dates of Operation		Run Time (hr)	Run Time (Min)	Pumping Rate (gpm)	Discharge Volume of Treated Water (cuft)
7/16/2009	7/16/2009	8	480	80	5120
7/22/2009	7/29/2009	150	9000	80	96000
8/4/2009	8/7/2009	74	4440	80	47360
8/12/2009	8/14/2009	50	3,000	115	46,000
8/17/2009	8/18/2009	38	2,280	115	34,960
8/25/2009	8/27/2009	50	3,000	115	46,000
9/1/2009	9/3/2009	50	3,000	115	46,000
9/8/2009	9/11/2009	50	3,000	115	46,000
9/14/2009	9/15/2009	35	2,100	115	32,200
9/30/2009	9/30/2009	4	240	134	*
				Total volume of surface water Treatment (cuft)	399,640

* Denotes no discharge to the MCES Sanitary Sewer.

City of Circle Pines Phosphorus
Reduction Demonstration Project
WSB Project No 1507-29

Table 7

MONITORING RESULTS
for
VOLUME OF WATER DISCHARGED TO MCES SANITARY SEWER

Dates of Operation		Run Time (hr)	Run Time (Min)	Pumping Rate (gpm)	Discharge Volume of Floc to MCES Sanitary Sewer (cu ft)	Additional Discharges to MCES Sanitary Sewer (cu ft)**
7/16/2009	7/16/2009	8	480	80	161	*
7/22/2009	7/29/2009	150	9000	80	2254	*
8/4/2009	8/7/2009	74	4440	80	966	*
8/12/2009	8/14/2009	50	3000	115	644	644
8/17/2009	8/18/2009	38	2280	115	483	*
8/25/2009	8/27/2009	50	3000	115	644	*
9/1/2009	9/3/2009	50	3000	115	644	6
9/8/2009	9/11/2009	50	3000	115	966	*
9/14/2009	9/15/2009	35	2100	115	483	4
9/30/2009	9/30/2009	4	240	134	-	43

Total discharge volume to MCES sanitary sewer (cu ft) = **7,245**

* Denotes no discharge to the MCES Sanitary Sewer.
**Require for maintenance and demonstration

City of Circle Pines Phosphorus
Reduction Demonstration Project
WSB Project No 1507-29

Table 8

MONITORING RESULTS
for
FLOCCULENT DISCHARGED TO MCES SANITARY SEWER

Sample Collection Date	MCES Testing Requirements	Sanitary Sewer Discharge Results (mg/L)	Maximum MCES Sanitary Sewer Discharge Limits (mg/L)
7/27/2009	Total Phosphorus	1.34	*
	Total Suspended Solids	3880	*
	pH	4.59	5 (min) 11(max)
	Mercury	0.00042	0.002
	Chemical Oxygen Demand	136	*
	Arsenic	0.03417	*
	Cadmium	0.00162	1.0
	Chromium	0.00654	6.0
	Copper	0.03890	4.0
	Lead	0.00904	1.0
	Nickel	0.00766	6.0
	Zinc	0.08336	6.0
	Molybdenum	0.01517	*
	Selenium	0.04894	*

* Limit not established by MCES for Sanitary Sewer Discharge.
** Material Testing was performed by William Lloyd Analytical Laboratory and Braun Intertec Analytical Laboratory.

City of Circle Pines Phosphorus
Reduction Demonstration Project
WSB Project No 1507-29

Table 9

MONITORING RESULTS
GOLDEN LAKE WETLAND WATER QUALITY

Testing Date	Testing Location	Testing Depth (ft)	Total Phosphorus (mg/L)	Ortho Phosphorus (mg/L)	Total Suspended Solids (mg/L)	Chlorophyll A (ug/L)	Secci Depth (ft)	pH	Dissolved Oxygen (mg/L)	Temperature (c)
8/25/2009	Location A *(See Attached Figure)*	Surface	*	*	*	*	*	7.70	7.08	22.00
		1.00	0.24	0.06	57	39	*	*	6.74	21.90
		2.00	*	*	*	*	2.50	*	5.50	21.30
		3.00	0.27	0.06	27	21	*	*	3.45	20.80
		3.50	*	*	*	*	*	*	0.07	20.80
8/25/2009	Location B *(See Attached Figure)*	Surface	*	*	*	*	*	8.24	12.00	24.00
		1.00	0.28	0.06	0	67	*	*	9.60	22.90
		2.00	*	*	*	*	2.50	*	5.21	22.10
		3.00	*	*	*	*	*	*	5.05	21.40
		4.00	*	*	*	*	*	*	0.15	21.00
		5.00	0.26	0.07	2	62	*	*	0.04	20.50

***** Water quality data was not collected at these depths.
** Testing was performed by William Lloyd Analytical Laboratory and Braun Intertec Analytical Laboratory.

City of Circle Pines Phosphorus Reduction
Demonstration Project
WSB Project No 1507-29

Table 10

MONITORING RESULTS
IMPACT OF TREATMENT PROCESS
ON
pH LEVELS
(without buffer)

Testing Date	Pumping Rate (gpm)	Aluminum Sulfate Dosage Ratio	Aluminum Sulfate Dosage Rate (ml/min)	Pre-Treatment pH	In-Tank pH	Post-Treatment pH
7/27/2009	80	0.5/1000	153.00	7.38	4.58	5.40
7/28/2009	80	0.25/1000	77.00	7.48	3.89	5.85
8/14/2009	115	0.25/1000	108.00	7.61	4.41	5.68
8/25/2009	115	0.25/1000	108.00	7.70	4.53	6.29
8/27/2009	115	0.125/1000	54.00	7.53	4.07	7.12
9/1/3909	115	0.18/1000	78.00	7.64	4.72	6.73
9/9/2009	115	0.50/1000	217.00	7.74	4.80	5.38
9/10/2009	115	0.038/1000	163.00	7.65	5.07	6.06
9/11/2009	115	0.55/1000	239.00	7.48	5.49	5.92
9/15/2009	115	0.18/1000	78.00	7.73	5.55	7.13

* MCES minimum and maximum pH Levels 5.0 to 11.0
* Recommended surface water discharge pH Level is 6.0

Appendix
Reference Information

BIOLOGICAL AND CHEMICAL SYSTEMS FOR NUTRIENT REMOVAL

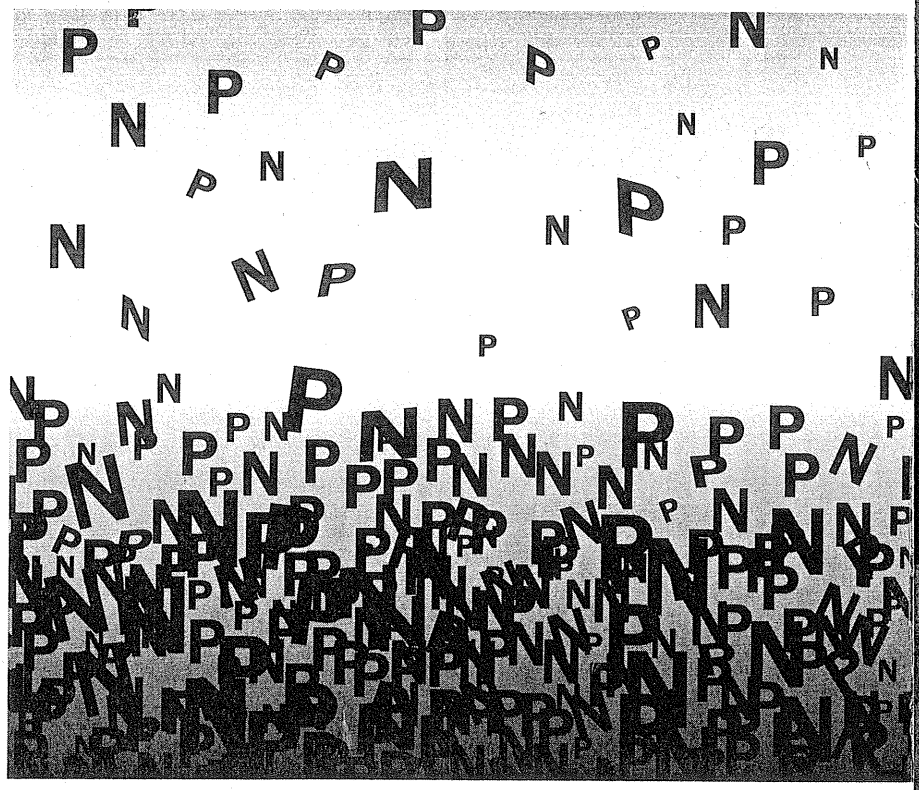

SPECIAL PUBLICATION

Water Environment Federation®
Preserving & Enhancing the Global Water Environment

Chapter 3 Chemical Phosphorus Removal

39 Principles of Chemical Phosphorus Removal
41 Ferrous Iron
42 Ferric Iron and Aluminum
47 Calcium
48 Design Examples
48 Chemical Phosphorus Removal Process Design
49 Phosphorus Removal by Alum Addition to Raw Wastewater and Aeration Basin
50 Alum Dose Determination
51 Chemical Requirements and Storage
52 Sludge Generation from Alum Addition
54 Phosphorus Removal by Ferric Chloride Addition to Raw Wastewater before Primary Treatment
54 Ferric Iron Dose Determination
54 Chemical Requirements and Storage
55 Sludge Generation from Ferric Chloride Addition
56 References

Principles of Chemical Phosphorus Removal

The basic principle of chemical phosphorus (P) removal relies on the transformation of soluble phosphorus to a particulate form and the removal of this form (together with any phosphorus already present in a particulate form), typically by sedimentation. Some phosphorus is removed in a conventional secondary wastewater treatment plant (WWTP), both in the primary and secondary treatment processes (see Chapter 1). Removal during primary settling is limited to a fraction of the particulate form and depends on the efficiency

of the primary clarifiers. In a secondary treatment process, phosphorus is incorporated to biomass and removed from wastewater through secondary sedimentation with waste biomass. As such, the quantity of phosphorus removed by a conventional secondary treatment process is a function of biomass yield and production.

Total effluent phosphorus concentration, $C_{TP,eff}$, can be estimated as

$$C_{TP,eff} = C_{SP,eff} + X_{eff} m_{PX} \tag{3.1}$$

Where

$C_{SP,eff}$ = concentration of soluble phosphorus (mainly soluble orthophosphate), mg/L;
X_{eff} = effluent suspended solids concentration, mg/L; and
m_{PX} = phosphorus content in suspended solids dry mass, mg P/mg suspended solids.

For conventional activated sludge, m_{PX} is 20 to 25 mg P/g volatile suspended solids (VSS) (2 to 2.5%). For chemical phosphorus removal, m_{PX} varies between 40 and 100 mg P/mg suspended solids (4 to 10%). Equation 3.1 emphasizes the contribution of suspended solids to total effluent phosphorus concentration and the need for effective solids removal. For example, if effluent suspended solids concentration is 20 mg/L with a phosphorus content of 5% (50 mg P/g suspended solids), a total phosphorus concentration below 1 mg P/L cannot be achieved.

The following cations typically are used for the precipitation of phosphorus from wastewater:

- Aluminum,
- Iron, and
- Calcium.

Under the right conditions, all three cations form insoluble precipitates with orthophosphate. For this reason soluble orthophosphate is the primary phosphorus species affected by chemical removal. Any accurate analysis of its removal can be carried out only if its concentrations are measured and reported. Unfortunately, soluble orthophosphate is rarely determined in practice. All other phosphorus species (such as condensed polyphosphates, colloids, and particulates containing phosphorus) are removed by secondary mechanisms including adsorption, coagulation, sedimentation, filtration, or biologically mediated removal. These mechanisms will not be discussed in this chapter.

The nature of the precipitates formed during chemical phosphate removal is not well known. Table 3.1 lists examples of chemical solids that may be formed during phosphate removal. Exact stoichiometric composition of

Table 3.1 Possible precipitates formed during phosphate removal.

Cation	Precipitate
Al(III)	Aluminum phosphate [$Al_r(H_2PO_4)(OH)_{3r-1}$]
	Aluminum hydroxide [$Al(OH)_3$]
Fe(II)	Ferrous phosphate [$Fe_3(PO_4)_2$]
	Ferrous hydroxide [$Fe(OH)_2$]
Fe(III)	Ferric phosphate [$Fe_r(H_2PO_4)(OH)_{3r-1}$]
	Ferric hydroxide [$Fe(OH)_3$]
Ca(II)	Tricalcium phosphate [$Ca_3(PO_4)_2$]
	Hydroapatite [$Ca_5(OH)(PO_4)_2$]
	Dicalcium phosphate [$CaHPO_4$]
	Calcium carbonate [$CaCO_3$]

phosphate precipitates is not fully known, but it is likely that it will vary from the simple forms such as $AlPO_4$ or $FePO_4$. Some authors (Arvin and Petersen, 1980, and Hsu, 1973) suggested that all three cations (aluminum, iron, and calcium) can be present in a precipitate together with other ions such as magnesium, sulfate, and bicarbonate. Variability in precipitate composition led to suggestions (Leckie and Stumm, 1970) that phosphate ion is also removed by adsorption on other chemical precipitates.

From an engineering point of view, three parameters are of particular importance for design, operation, and analysis of chemical phosphorus removal:

- Dose requirements,
- Minimum achievable phosphate concentration, and
- Effects of pH.

These factors will be discussed in the subsequent sections for the three cations involved.

FERROUS IRON. The main source of ferrous iron [Fe(II)] is spent pickle liquor containing mostly $FeSO_4$ and originating from metal-processing operations. It is a potentially convenient and economical source of precipitating agent, but it may contain hazardous materials (such as heavy metals) that can either pass through with the effluent or accumulate in the sludge. It should be noted, however, that commercially available technical-grade iron salts [both Fe(II) and ferric iron, or Fe(III)] may also contain a certain amount of heavy metals.

Recht and Ghassemi (1970) conducted an extensive study of phosphate precipitation with Fe(II) in the absence of dissolved oxygen. They concluded that optimum removal occurred at pH 8, with residual orthophosphate at 0.4 mg P/L. On either side of the optimum pH, orthophosphate residual concentrations were much greater: 8 mg P/L at pH 7 and 3.5 mg P/L at pH 9. At pH

8, a reaction time of 2 hours was required to achieve maximum removal. Although the initial iron:phosphorus molar ratio was 1:1, not all Fe(II) was removed from the solution. The precipitate formed in their experiments was identified as vivianite, $Fe_2(PO_4)_3 \cdot 8H_2O$. Despite theoretically more advantageous stoichiometry for orthophosphate precipitation with Fe(II), the results of two full-scale applications of Fe(II) to raw wastewater (Mentor, Ohio, and Texas City, Texas) cited by Recht and Ghassemi indicated that the majority of removal occurred in the aeration tanks. Low phosphate removal in primary treatment was attributed to inadequate reaction time of Fe(II), formation of poorly settling precipitate, or complexation of Fe(II) by organic matter.

If exposed to aerobic conditions (for example, when dosed to an aeration tank), Fe(II) oxidizes rapidly to Fe(III). Leckie and Stumm (1970) indicated that ferric iron Fe(III) formed by oxidation of Fe(II) is more effective for phosphate precipitation than Fe(III) added directly from a stock solution. Recht and Ghassemi (1970) found that the speed of phosphate precipitation increased substantially in the presence of oxygen as Fe(II) was oxidized to Fe(III). Similarly to Leckie and Stumm (1970), they claimed that phosphate removal efficiency with oxidized Fe(II) was better than for an equivalent dose of Fe(III) from stock solution. However, the practical efficiency of phosphorus removal is also affected by the settling characteristics of the precipitate. Leckie and Stumm (1970) reported that the precipitate formed by oxidized Fe(II) in clean water was inferior to those from Fe(III).

FERRIC IRON AND ALUMINUM. Because there are many similarities between the chemistry of orthophosphate precipitation with Fe(III) and aluminum [Al(III)], these two agents will be discussed together. Ferric iron is used as ferric chloride ($FeCl_3$) or ferric sulfate [$Fe_2(SO_4)_3$]. Aluminum for phosphate removal is used as either alum [$Al_2(SO_4)_3 \cdot 18H_2O$], sodium aluminate ($NaAlO_2$), or polyaluminum chloride (PAC). The latter chemical is often used when enhanced solids removal is also a treatment objective. Regardless of the form used, Fe^{3+} or Al^{3+} cations are the precipitating agents. Besides formation of phosphate precipitate, ferric iron and aluminum can react in an aquatic environment to produce a range of other compounds, soluble or not, including hydroxides [for example, $Fe(OH)_3(s)$ or $Al(OH)_3(s)$] and a variety of polymeric species. Major chemical reactions are listed in Table 3.2.

When an excess dose of metal salt [Fe(III) or Al(III)] is added, metal hydroxide will precipitate in addition to metal phosphate precipitating (Ferguson and King, 1977, and Kavanaugh *et al.*, 1978). In this case, residual phosphate concentration can be calculated from equilibrium equations if the appropriate equilibrium constants are known. Table 3.2 lists the equilibrium constants compiled from a number of sources. Of those, only solubility products for $Al(OH)_3$ and $Fe(OH)_3$ are known with any accuracy. The values of solubility products for metal phosphates and stability constants for soluble

Table 3.2 **Chemical reactions of Al(III) and Fe(III) (Feitknecht and Schindler, 1963; Gates *et al.*, 1990; Hogfeldt, 1983; Smith and Martell, 1976; and Stumm and Morgan, 1970).**

Reaction		Equilibrium constants Al(III)	Fe(III)
1. $Me^{3+} + 3\ H_2O \rightleftarrows Me(OH)_3(s)$	pK_{MeOH} =	9.1	−0.5
2. $r\ Me^{3+} + H_2PO_4^- + (3r\text{-}1)\ OH^- \rightleftarrows Me_r(H_2PO_4)(OH)_{3r\text{-}1}(s)$	pK_s =	25.8	67.1
	r =	0.8	1.6
3. $Me^{3+} + H_2PO_4^- \rightleftarrows MeH_2PO_4^{2+}$	pK_{MP1}		−21.3
4. $Me^{3+} + HPO_4^{2-} \rightleftarrows MeHPO_4^+$	pK_{MP2}	−12.1	
5. $H_3PO_4 \rightleftarrows H^+ + H_2PO_4^-$	pK_1 =	2.1	
6. $H_2PO_4^- \rightleftarrows H^+ + HPO_4^{2-}$	pK_2 =	7.2	
7. $HPO_4^{2-} \rightleftarrows H^+ + PO_4^{3-}$	pK_3 =	12.3	

metal–phosphate complexes were estimated from field and laboratory data on phosphate removal (Gates *et al.*, 1990).

When both metal hydroxide and metal phosphate precipitates are present, the residual orthophosphate concentration can be calculated as follows:

1. Calculate metal cation concentration (Me^{3+}) from the solubility product of its metal hydroxide (reaction 1 in Table 3.2):

$$\log[Me^{3+}] = pK_{MeOH} - 3\ pH \tag{3.2}$$

2. Calculate H_2PO_4 concentration from the solubility product of metal phosphate (reaction 2 in Table 3.2):

$$\log[H_2PO_4^-] = -pK_s - r \log[Me^{3+}] + (3r - 1)(pK_w - pH) \tag{3.3}$$

3. Calculate remaining orthophosphate species (reactions 5 through 7 in Table 3.2):

$$\log[H_3PO_4] = \log[H_2PO_4^-] - pH + pK_1 \tag{3.4}$$

$$\log[HPO_4^{2-}] = \log[H_2PO_4^-] + pH - pK_2 \tag{3.5}$$

$$\log[PO_4^{3-}] = \log[HPO_4^{2-}] + pH - pK_3$$

At pH values typically found in wastewater treatment, Equation 3.5 is the most important.

4. Calculate soluble metal–phosphate complexes (reactions 3 and 4 in Table 3.2).

$$\log[MeH_2PO_4^{2+}] = \log[Me^{3+}] + \log[H_2PO_4^-] + pK_{MP1} \quad (3.7)$$

$$\log[MeHPO_4^+] = \log[Me^{3+}] + \log[HPO_4^{2-}] + pK_{MP2} \quad (3.8)$$

It appears that for Al(III) addition, soluble complex $AlHPO_4^+$ (Equation 3.8) is the dominant of the two complexes, while for Fe(III) addition, soluble complex $FeH_2PO_4^{2+}$ (Equation 3.7) predominates.

5. Calculate total residual soluble phosphate concentration (in mol/L):

$$C_{P,res} = [H_3PO_4] + [H_2PO_4^-] + [HPO_4^{2-}] + [PO_4^{3-}] + [MeH_2PO_4^{2+}] + [MeHPO_4^+] \quad (3.9)$$

The residual phosphate concentration of Equation 3.9 is the lowest theoretically achievable concentration because of phosphate precipitation at high doses of Fe(III) or Al(III). It is a function of pH as shown in Figure 3.1 for Al(III) and Figure 3.2 for Fe(III). These theoretical curves delineate minimum residual soluble orthophosphate concentrations observed in laboratory-

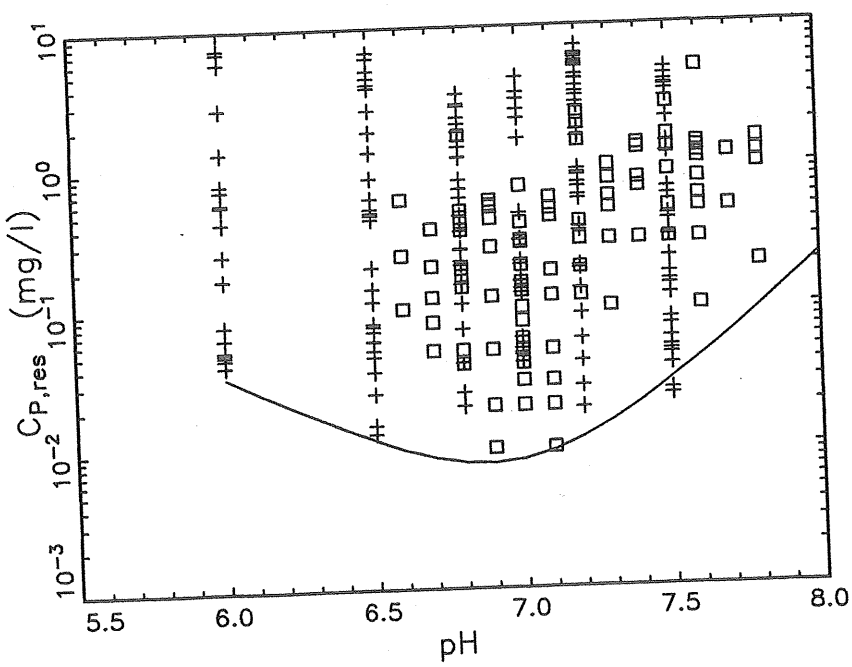

Figure 3.1 **Observed residual soluble orthophosphate concentrations and theoretical solubility limit for Al(III) (+ = laboratory [Gates *et al.*, 1990], and □ = full-scale data [Trenton, N.J., WWTP]).**

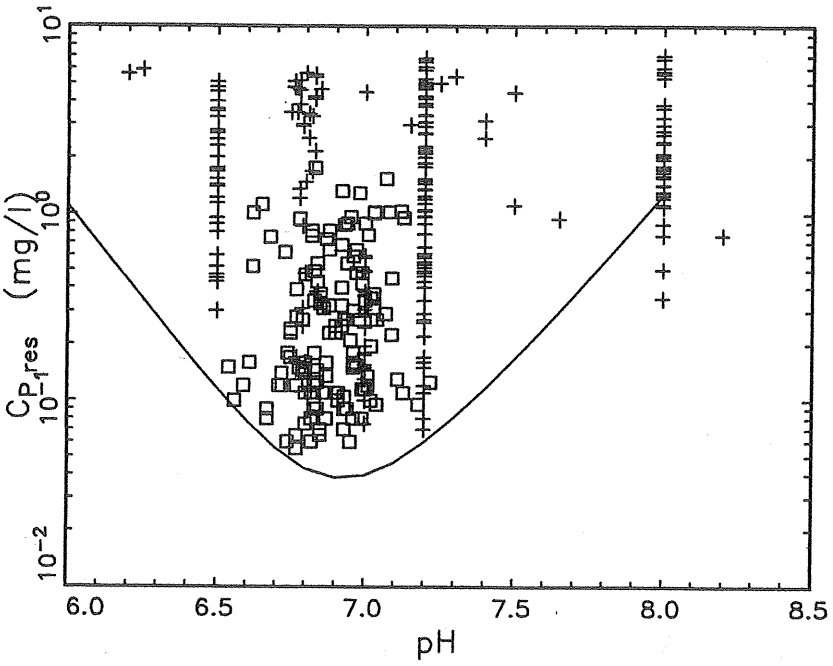

Figure 3.2 **Observed residual orthophosphate concentrations and theoretical solubility limit for Fe(III) (+ = laboratory data [Luedecke *et al.,* 1988], and □ = full-scale data [Blue Plains WWTP, Washington, D.C.]).**

and full-scale activated-sludge systems. It is worth noting that for both Al(III) and Fe(III), optimum pH (corresponding to minimum metal phosphate solubility) is approximately 6.8 and is relatively broad. In contrast, Recht and Ghassemi (1970) reported an optimum pH of 6.0 for phosphate precipitation from distilled water with Al(III) and a pH of 3.5 to 4.0 for precipitation with Fe(III). The difference in optimum pH can be attributed to the influence of other chemical species present in wastewater. Hsu (1973) reported that the addition of Ca^{2+} brought about a change from a well-defined optimum pH of 4 without Ca^{2+} to a broad pH range of 4 to 8 at 2 mmol/L Ca^{2+}. Similar calcium effects were also reported by Grohman *et al.* (1984), who studied ferric phosphate precipitation from "clean" solutions. Arvin and Petersen (1980) incorporated the effects of calcium and bicarbonate to a complex semiempirical model of phosphate precipitation. Despite these studies, the mechanism of calcium effect is not fully understood.

Composition of metal phosphate precipitate has a significant effect on the required metal dose. The ratio of metal dose to soluble orthophosphate removed closely approximates the overall precipitate (or precipitate mixture) composition because the residual soluble metal concentrations are very small. Figure 3.3 shows the ratio as a function of residual phosphate concentration for batch and continuous experiments with aluminum for a pH in the range 6 to 7.5. Figure 3.4 presents a similar relationship for Fe(III) for labo-

ratory- and full-scale activated-sludge systems for pH 6.5 to 7.5. For both metals, the relationships corroborate the chemical mechanism of phosphate precipitation. At high residual phosphate concentrations (that is, at low metal doses) the ratio in the precipitate remains essentially constant, indicating stoichiometric precipitation. At high metal doses, the phosphate solubility limit is approached, and the excess of Al(III) or Fe(III) precipitates as metal hydroxide, resulting in a dramatic increase of the Me/P ratio. At residual phosphate concentrations of less than approximately 1 mg P/L, the Me/P ratio slightly increases as a result of either additional phosphate adsorption (Luedecke *et al.*, 1988, and Goldshmid and Rubin, 1978) or substitution of orthophosphate for OH in the precipitate (Hsu, 1973). Although the exact mechanism of precipitate formation is not fully understood, Figures 3.3 and 3.4 can be used to calculate the metal dose necessary to achieve required residual soluble orthophosphate:

$$\mathrm{Me_{dose}} = (\mathrm{Me/P})(C_{\mathrm{P,in}} - C_{\mathrm{P,res}}) \tag{3.10}$$

where (Me/P) can be read off the graphs for required residual phosphate concentration. For biological treatment systems, influent concentration includes

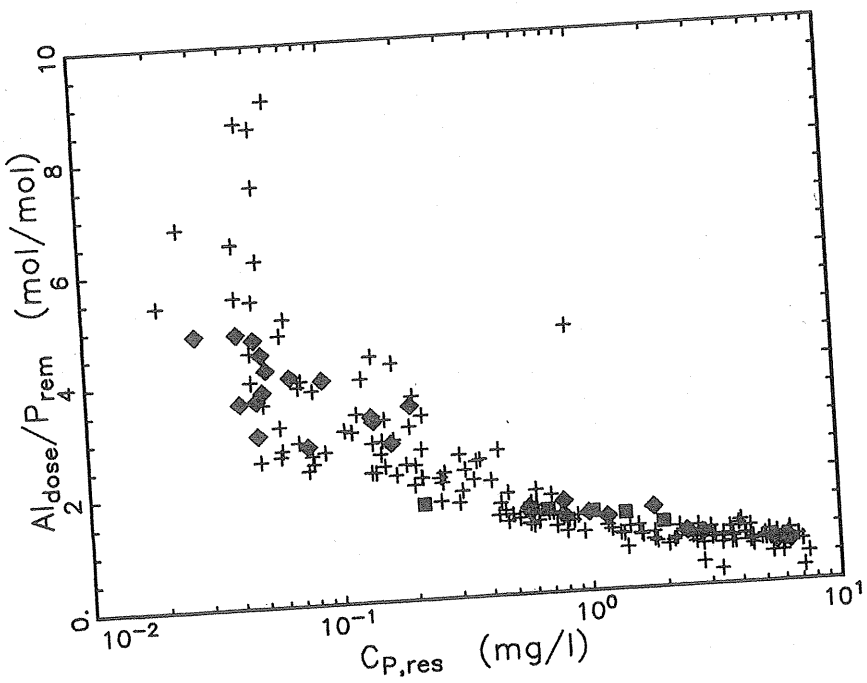

Figure 3.3 **Ratio of Al(III) dose to phosphorus removed as a function of residual soluble orthophosphate concentration (+ = laboratory batch experiments [Gates, 1991], ◆ = laboratory continuous-flow experiments [Gates, 1991], and ■ = laboratory University of Cape Town system [Rabinowitz *et al.*, 1987]).**

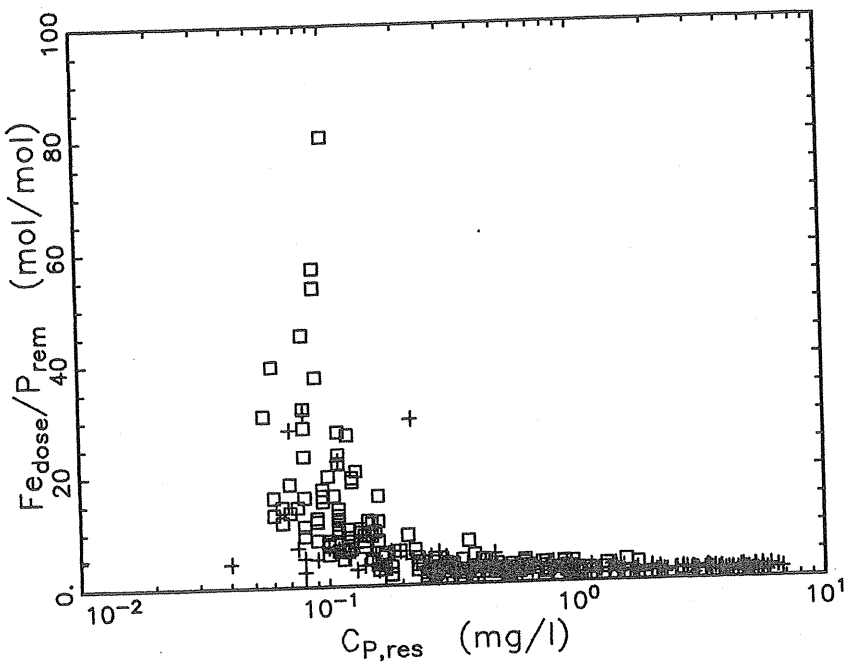

Figure 3.4 **Ratio of Fe(III) dose to phosphorus removed as a function of residual soluble orthophosphate concentration (+ = laboratory experiments [Luedecke *et al.*, 1988], and □ = full-scale data [Blue Plains WWTP, Washington, D.C.]).**

soluble orthophosphate concentration and a portion of soluble nonorthophosphate and particulate phosphorus concentration. The latter two fractions of total phosphorus are partially hydrolyzed during the treatment and converted to orthophosphate requiring an additional metal dose.

CALCIUM. Phosphate precipitation with lime was the earliest method of phosphorus removal. Calcium forms several insoluble compounds with phosphate (see Table 3.2), among which hydroxyapatite $Ca_5(PO_4)_3(OH)$ seems to be the most important (Menar and Jenkins, 1972). Additionally, calcium carbonate can form depending on pH, wastewater alkalinity, and calcium dose. Figure 3.5 shows that significant phosphate removal can only be achieved at higher pH values. Most reports (Buzzell and Sawyer, 1967; Menar and Jenkins, 1972; and Spiegel and Forrest, 1969) indicated that removal of phosphate to values below 1 mg P/L requires values of pH of 10.5 to 11. For this reason lime is used either in primary treatment or following biological treatment. The dose of lime and the amount of solids produced primarily are functions of total alkalinity of wastewater according to the following reaction:

$$Ca(OH)_2 + HCO_3^- \leftrightarrows CaCO_3 + H_2O + OH^- \qquad (3.11)$$

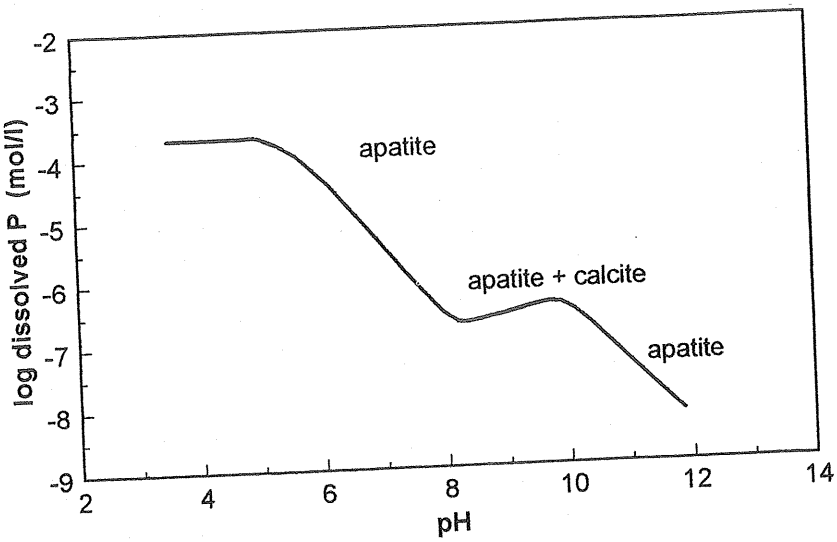

Figure 3.5 **Equilibrium solubility for calcium phosphate system. (Adapted with permission from Jenkins, D., and Hermanowicz, S.W. [1991] Principles of Chemical Phosphorus Removal. In *Phosphorus and Nitrogen Removal from Municipal Wastewater: Principles and Practice*. R.I. Sedlak [Ed.]. Copyright CRC Press, Boca Raton, Florida © 1994.)**

These factors do not significantly depend on phosphate concentration. According to Equation 3.11, the required lime dose [in mg $Ca(OH)_2$/L] is approximately 1.5 times the total alkalinity (as mg $CaCO_3$/L).

DESIGN EXAMPLES

CHEMICAL PHOSPHORUS REMOVAL PROCESS DESIGN. The process design of chemical phosphorus removal is dependent on several factors. The most important factors are

- Wastewater characteristics such as phosphorus concentrations, total suspended solids (TSS), pH, and alkalinity;
- Chemicals used for precipitation, such as aluminum, calcium, or iron; and
- The point of chemical addition, for example primary treatment, secondary treatment, or tertiary treatment.

Wastewater characterization involves determining constituent parameters under varying diurnal and seasonal loading conditions such that chemical type, chemical requirements, and feed rates can be designed to satisfy both peak

and minimum requirements for best phosphorus removal. Because the chemicals added to remove phosphorus may also be involved in other reactions such as alkalinity consumption, reaction with sulfides, and coagulation of suspended solids, chemical doses in excess of those estimated using wastewater characteristics and precipitation chemistry of phosphorus must often be provided.

The selection of the chemical used for phosphorus removal depends on the cost of the chemical, alkalinity consumption, quantities of sludge generated, and safety in handling and use of the chemical (Jenkins and Hermanowicz, 1991). Typical forms of the three cations used for phosphorus removal are aluminum sulfate (alum) and sodium aluminate for aluminum; ferric chloride, ferrous chloride, and ferrous sulfate for iron; and lime for calcium. However, lime addition for phosphorus removal from wastewater is not typical in current designs because of drawbacks such as large sludge production rates, high pH requirement, and large investments in equipment, operation, and maintenance (Jenkins and Hermanowicz, 1991). Hence, use of calcium for phosphorus removal from wastewater is not discussed further in this section.

The ability to achieve the required effluent phosphorus limits is strongly dependent on the point of chemical addition in the treatment process. The potential points of chemical addition in the treatment process are before primary treatment (pre-precipitation), before secondary treatment prior to either the aeration basins or the secondary clarifiers (simultaneous precipitation), and postsecondary treatment or post-precipitation. The addition of chemicals before primary treatment requires provision of mixing tank for dissolution of chemicals, and dosages of chemicals required for phosphorus removal are much higher than stoichiometric requirements because of chemical consumption for suspended solids coagulation. Similarly, postsecondary addition of chemicals to remove phosphorus requires a mixing tank for chemical dissolution and tertiary clarification of filtration for solids removal. Jenkins and Hermanowicz (1991) stated that either a combination of primary and secondary chemical addition or tertiary treatment is necessary to achieve effluent phosphorus concentrations lower than 1.0 mg P/L.

The following examples provide the procedures for process design of phosphorus removal using metal salts addition before primary clarification or to aeration basin. The chemical doses are determined using Figures 3.3 and 3.4 and Equation 3.10. These design examples can be used as a starting point to either design a new chemical phosphorus removal system or to retrofit an existing WWTP. The final design should be based on pilot-scale trials, and possibly full-scale trials of these example process designs to account for the variations in the characteristics of the wastewater being treated.

Phosphorus Removal by Alum Addition to Raw Wastewater and Aeration Basin. This example presents the basic steps in the design of phosphorus removal by alum addition during primary and secondary treatment

stages. Because secondary treatment by activated-sludge processes or other biological processes requires phosphorus for biomass growth, it is undesirable to remove very high levels of total phosphorus in the primary clarifiers.

The wastewater characteristics and effluent requirements for this design example are as follows:

- Wastewater average flow = 5 mgd (1.89×10^7 m^3/d),
- Wastewater peak flow = 12.5 mgd (4.73×10^7 m^3/d),
- Biochemical oxygen demand (BOD_5) = 250 mg/L,
- Total suspended solids = 270 mg/L,
- Total phosphorus = 8 mg P/L,
- Orthophosphate = 5 mg P/L,
- pH = 7.0,
- Alkalinity = 250 mg/L,
- Effluent total phosphorus limit ≤ 0.5 mg P/L,
- Effluent TSS limit ≤ 15 mg/L, and
- Effluent BOD_5 limit ≤ 15 mg/L.

ALUM DOSE DETERMINATION. The aluminum dose to be added can be determined by using Equation 3.10 and Figure 3.3. Because the soluble orthophosphate form is removed by chemical precipitation, the dose of aluminum required to remove orthophosphate in primary treatment is as follows:

$$Al_{dose} = (Al/P)\,(C_{P,in} - C_{P,res}) \tag{3.12}$$

From Figure 3.3, we can see that for $C_{P,res} < 0.1$ mg/L, the Al/P ratio increases steeply. It is economical to keep the Al/P ratio low; therefore, $C_{P,res} = 0.1$ mg/L can be selected. For $C_{P,res} = 0.1$ mg/L, Al/P ratio = 3 (from Figure 3.3) and $C_{P,in}$ (ortho P) = 5 mg/L (given). Therefore,

$$Al_{dose} = 3\,(5 - 0.1) = 14.7 \text{ mg/L}$$

Use $Al_{dose} = 15$ mg/L.

For secondary treatment, the influent $C_{P,in}$ includes all the remaining phosphorus because the nonorthophosphate and particulate phosphorus are partially hydrolyzed and converted to orthophosphate during biological treatment. Some of the phosphorus is used for biomass growth; however, determining $C_{P,in}$ as all the remaining phosphorus in the primary effluent is a conservative approach:

$$C_{P,in} = 8 - (5 - 0.1) = 3.1 \text{ mg/L} \tag{3.13}$$

Similar to primary treatment, using Equation 3.10 and Figure 3.3, we can determine aluminum dose to be added to secondary treatment to obtain effluent

soluble P = 0.1 mg/L. It is required to achieve effluent soluble P = 0.1 mg/L because the TSS in the effluent contains particulate phosphorus, approximately 2 to 2.5%. Therefore, at effluent TSS = 15 mg/L and phosphorus content of 2.5% in the TSS, the particulate phosphorus concentration in the effluent = 0.375 mg/L.

To achieve an effluent total of P ≤ 0.5 mg/L, the effluent soluble phosphorus must be less than (0.5 – 0.375) = 0.125 mg/L.

- $C_{P,in}$ = 3.1 mg P/L;
- $C_{P,res}$ = 0.1 mg P/L;
- Al/P = 2 (from Figure 3.3);
- Al_{dose} = 2 (3.1 − 0.1) = 6.0 mg/L; and
- Total Al_{dose} = 15 + 6 = 21 mg/L.

CHEMICAL REQUIREMENTS AND STORAGE. The amount of aluminum required, in kilograms per day, is equal to

$$\text{Flow (L/d)} \times \text{Dose (mg/L)} \times 10^{-6}\ \text{kg/g} \tag{3.14}$$

$$= (1.89 \times 1.7\ \text{L/d})\ (21\text{mg/L})\ (10^{-6}\ \text{kg/g}) = 397\ \text{kg/d}$$

Aluminum typically is added as alum, $Al_2(SO_4)_3$. Because 14 H_2O = 594.3 g/mole,

$$\text{Percent aluminum in dry alum} = (2 \times 27 \times 100)/594.3 = 9.08\%$$

Therefore,

$$\text{Amount of alum required} = (397 \times 100)/9.08 = 4\ 377\ \text{kg/d}$$

Using 50% alum by weight, unit weight = 1.33 kg/L (11.1 lb/gal). The volume of 50% alum solution required at average flow is equal to

$$4\ 377/(0.5 \times 1.33) = 6\ 575\ \text{L/d}$$

The volume of 50% alum solution required at peak flow is equal to

$$6.575\left(\frac{4.73 \times 10^7}{1.89 \times 10^7}\right) = 16\ 455\ \text{L/d}$$

Alum storage tanks are sized either as 1.5 times the largest shipment or 10-day storage at peak flow rates.

$$\text{Provide 10-day storage at peak levels} = 10(16\ 455\ \text{L/d})$$
$$= 165\ 000\ \text{L (43 830 gal)}$$

Provide a 19 000-L (50 000-gal) storage tank that can accommodate alum solution storage from 12 tank trucks (4 000 gal/tank truck) with a 7 570-L (2 000-gal) free space. The storage tank should be provided with temperature control higher than 30°F (below which alum crystallizes), recirculation pumps, and secondary containment for possible spills during unloading from tank trucks and overflow spillage.

SLUDGE GENERATION FROM ALUM ADDITION. Addition of alum to both primary treatment and secondary treatment for phosphorus removal results in more primary sludge production and less secondary sludge production. More sludge production in primary treatment is because of additional chemical sludge, sludge generated by enhanced removal of influent suspended solids, and soluble total organic carbon after chemical addition. Lesser sludge production from secondary treatment may be because of lower BOD loads in primary effluent that has been chemically treated.

In primary treatment, TSS and BOD removal without chemical addition are approximately 50% and 30%, respectively. Addition of alum improves the TSS removal to greater than 75%, and BOD removal to 50% (U.S. EPA, 1987). Additional organic carbon removal is also possible if polymer is added along with metal salts in the primary treatment, which will not be considered in this design example. The amount of primary sludge generated can be estimated as follows. Additional primary sludge removed because of alum addition (improved TSS removal from 50% to 75%) is equal to

$$\begin{aligned}(0.75 - 0.5) &\times \text{Influent TSS} \times \text{Flow} \times 10^{-6} \\ &= 0.25 \times 270 \times 1.89 \times 10^{7} \times 10^{-6} \qquad (3.15) \\ &= 1\,277 \text{ kg/d}\end{aligned}$$

Chemical sludge because of alum addition is from two components: aluminum phosphate precipitate, and aluminum hydroxide precipitate formed from aluminum in excess of stoichiometric amounts.

According to reaction 2 in Table 3.2, $Al_{0.8}(H_2PO_4)(OH)_{1.4}$ (MW = 142.4) is the form of precipitate formed after aluminum addition, and according to reaction 1, $Al(OH)_3$ (MW = 78) is the excess aluminum hydroxide formed.

Al dose = 15 mg Al/L = 15/27 = 0.555 mmole Al/L
P removed = 4.9 mg P/L = 4.9/31 = 0.158 mmole P/L
Stoichiometric Al required, r = (0.8 mmole Al/mmole P removed) × 0.158 = 0.126 mmole Al/L
Excess Al added = 0.555 − 0.126 = 0.428 mmole Al/L
$Al_{0.8}(H_2PO_4)(OH)_{1.4}$ sludge = 0.158 × 142.4 = 22.5 mg/L
$Al(OH)_3$ sludge = 0.428 × 78 = 33.4 mg/L
Total chemical sludge produced = 22.5 + 33.4 = 55.9 mg/L

Chemical sludge because of alum addition (55.9 mg/L) = Flow × $55.9 \times 10^{-6} = 1.89 \times 10^{7} \times 55.9 \times 10^{-6} = 1\,058$ kg/d
Total increase in primary sludge production = 1 277 + 1 058 = 2 335 kg/d

Waste activated sludge (WAS) from biological treatment is reduced by alum addition in the primary treatment because BOD removal in the primary treatment is increased from approximately 30% to 50% (U.S. EPA, 1987).

Secondary sludge production = WAS + Mass of effluent TSS (3.16)
WAS P_x, kg VSS/d (without alum) = Y_{obs} × Flow × BOD removal × 10^{-6}
Assume observed yield, Y_{obs} = 0.5 g VSS/g BOD
Primary effluent BOD (without alum) = 250 × (1 − 03) = 175 mg/L
Primary effluent BOD (with alum) = 250 × (1 − 0.5) = 125 mg/L
Secondary effluent BOD = 15 mg/L
WAS P_x, kg VSS/d (without alum) = $0.5 \times 1.89 \times 10^{-7} \times 10^{-6} =$ 1 514
WAS P_x, kg VSS/d (with alum) = $0.5 \times 1.89 \times 10^{7} \times (125 - 15) \times 10^{-6} =$ 1 041
Decrease in WAS because of alum addition to primary treatment = 1 514 – 1 041 = 473 kg VSS/d
Decrease in WAS because of alum addition to primary treatment = 473/0.85 (assume TSS/VSS ratio = 0.85) = 556 kg TSS/d

Similar to primary sludge, the chemical sludge composition is because of two components: aluminum phosphate sludge and aluminum hydroxide sludge.

Al dose = 6 mg Al/L = 6/27 = 0.222 mmole Al/L
P removed = 3.0 mg P/L = 3.0/31 = 0.097 mmole P/L
Stoichiometric Al required, r = (0.8 mmole Al/mmole P removed) × 0.097 = 0.077 mmole Al/L
Excess Al added = 0.222 − 0.077 = 0.145 mmole Al/L
$Al_{0.8}(H_2PO_4)(OH)_{1.4}$ sludge = 0.097 × 142.4 = 3.8 mg/L
$Al(OH)_3$ sludge = 0.0145 × 78 = 11.3 mg/L
Total chemical sludge produced = 13.8 + 11.3 = 25.1 mg/L
Chemical sludge because of alum addition (25.1 mg/L) = Flow × $25.1 \times 10^{-6} = 1.89 \times 10^{7} \times 25.1 \times 10^{-6}$
= 475 kg/d
Reduction in secondary sludge produced = 556 − 475 = 81 kg TSS/d

Therefore, the net effect of chemical addition to both primary and secondary treatment processes is an increase in primary sludge production by 2 335

kg/d (5 146 lb/d), and a decrease in secondary sludge production of 81 kg/d (179 lb/d).

Phosphorus Removal by Ferric Chloride Addition to Raw Wastewater before Primary Treatment. The following example illustrates the steps involved in process design for phosphorus removal in a typical WWTP (described in the previous design example), with the addition of ferric chloride to the wastewater before the primary treatment process. This process design involves the use of Figure 3.4 and Equation 3.10 to determine the dose of ferric iron required.

FERRIC IRON DOSE DETERMINATION. Because soluble orthophosphate form is removed by chemical precipitation, the dose of iron required to remove orthophosphate in the primary treatment is as follows:

$$\text{Fe(III)}_{\text{dose}} = (\text{Fe/P})\,(C_{\text{P,in}} - C_{\text{P,res}}) \tag{3.17}$$

From Figure 3..4, we can see that for $C_{\text{P,res}} < 0.2$ mg/L, the Fe/P ratio increases steeply. It is economical to keep the Fe/P ratio low; hence, $C_{\text{P,res}} =$ 0.2 mg/L can be selected. For $C_{\text{P,res}} = 0.2$ mg/L, Fe/P ratio = 5 (from Figure 3.4). If $C_{\text{P,in}}$ (orthophosphate) = 5 mg/L (given), then $\text{Fe}_{\text{dose}} = 5 \times (5 - 0.2)$ = 24 mg/L.

$$\text{Primary effluent phosphorus concentration} = 8 - 4.8 = 3.2 \text{ mg P/L}$$

It is possible to achieve lower effluent phosphorus concentrations after the secondary treatment involving biological processes because a certain amount of phosphorus present in the primary effluent would be incorporated to the biomass for growth. Phosphorus removal by secondary treatment will not be discussed in this design example.

CHEMICAL REQUIREMENTS AND STORAGE. The amount of ferric iron required, in kilograms per day, is

$$\text{Flow (L/d)} \times \text{Dose (mg/L)} \times 10^{-6} = 1.89 \times 10^{7} \times 24 \times 10^{-6} = 454 \text{ kg/d}$$

Ferric iron typically is added as $FeCl_3$; formula weight = 162.3 g/mole. Therefore,

$$\text{Percent ferric iron in dry } FeCl_3 = (55.85 \times 100)/162.3 = 34.4\%$$

Therefore,

$$\text{Amount of } FeCl_3 \text{ required} = (454 \times 100)/34.4 = 1\,319 \text{ kg/d}$$

Using 30% $FeCl_3$ solution by weight, unit weight = 1.34 kg/L (11.2 lb/gal).

Volume of 30% $FeCl_3$ solution required at average flow =
$1\,319/(0.3 \times 1.34)$
$= 3\,280$ L/d
Volume of 30% $FeCl_3$ solution required at peak flow
$= (3\,280 \times 4.73 \times 10^7)/1.89 \times 10^7 = 8\,209$ L/d

$FeCl_3$ solution storage tanks are sized either as 1.5 times the largest shipment or as 10-day storage at peak flow rates.

Provide 10-day storage at peak levels $= 10 \times 8\,209 = 82\,100$ L (21 640 gal)

Provide a 95 000-L (25 000-gal) storage tank that can accommodate $FeCl_3$ solution storage from six tank trucks (15 000 L [4 000 gal]/tank truck) with 3 800 L (1 000 gal) of free space. The storage tank should be provided with temperature control above −58°F (below which 30% $FeCl_3$ solution freezes), recirculation pumps, and secondary containment for possible spills during unloading from tank trucks and overflow spillage.

SLUDGE GENERATION FROM FERRIC CHLORIDE ADDITION. The addition of a $FeCl_3$ solution for phosphorus removal results in higher sludge production from primary treatment because of additional chemical sludge, sludge generated by enhanced removal of influent suspended solids, and soluble total organic carbon after chemical addition. In primary treatment, TSS and BOD removals without chemical addition are approximately 50% and 30%, respectively. Addition of coagulant such as $FeCl_3$ improves the TSS removal to more than 75%, and BOD removal improves it to 50% (U.S. EPA, 1987). The amount of primary sludge generated can be estimated as follows:

Additional primary sludge removed because of $FeCl_3$ addition
(improved TSS removal from 50% to 75%) =
$(0.75 - 0.5) \times \text{Influent TSS} \times \text{Flow} \times 10^{-6}$ (3.18)
$= 0.25 \times 270 \times 1.89 \times 10^7 \times 10^{-6}$
$= 1\,277$ kg/d

Chemical sludge resulting from $FeCl_3$ addition is caused by two components: ferric phosphate precipitate and ferric hydroxide precipitate formed from ferric iron in excess of stoichiometric amounts.

According to reaction 2 in Table 3.2, $Fe_{1.6}(H_2PO_4)(OH)_{3.8}$ (MW = 2.51 g/mole) is the form of precipitate formed after ferric iron addition, and according to reaction 1, $Fe(OH)_3$ (MW = 106.8) is the excess ferric hydroxide formed.

Fe dose = 24 mg Fe/L = 24/55.85 = 0.430 mmole Fe/L
P removed = 4.8 mg P/L = 4.8/31 = 0.155 mmole P/L
Stoichiometric Fe required, r = (1.6 mmole Fe/mmole P removed) × 0.155 = 0.248 mmole Fe/L

Excess Fe added = 0.430 − 0.248 = 0.182 mmole Fe/L
$Fe_{1.6}(H_2PO_4)(OH)_{3.8}$ sludge = 0.155 × 251 = 38.9 mg/L
$Fe(OH)_3$ sludge = 0.182 × 106.8 = 19.4 mg/L
Total chemical sludge produced = 38.9 + 19.4 = 58.3 mg/L
Chemical sludge resulting from $FeCl_3$ addition (58.3 mg/L)
= Flow × 58.3 × 10^{-6} = 1.89 × 10^7 5 × 58.3 × 10^{-6}
= 1 103 kg/d
Total increase in primary sludge production = 1 277 + 1 103
= 2 380 kg/d

Ferric chloride addition to raw wastewater before primary treatment for phosphorus removal increases the primary sludge production by 2 380 kg/d (5 146 lb/d).

REFERENCES

Arvin, E., and Petersen, G. (1980) A General Equilibrium Model of Phosphate precipitation. *Prog. Water Technol.*, **12**, 283.

Buzzell, J., and Sawyer, A. (1967) Removal of Algal Nutrients from Raw Wastewater with lime. *J. Water Pollut. Control Fed.*, **39**, R16.

Feitknecht, W., and Schindler, P. (1963). *Solubility Constants of Metal Hydroxides and Metal Hydroxide Salts in Aqueous Solutions*. Butterworths, London, G.B.

Ferguson, J.F., and King, T. (1977) A Model for Aluminum Phosphate Precipitation. *J. Water Pollut. Control Fed.*, **49**, 646.

Gates, D.D. (1991) Simultaneous Precipitation of Orthophosphate in Activated Sludge Systems with Al(III). Ph.D. thes., Dep. Civ. Eng., Univ. Calif., Berkeley.

Gates, D.D., *et al.* (1990) Mechanism of Chemical Phosphorus Removal in Activated Sludge with Al(III) and Fe(III). *Proc. 1990 Am. Soc. Civ. Eng. Natl. Conf. Environ. Eng.*, Arlington, Va.

Goldshmid, T., and Rubin, A.J. (1978) Aqueous Chemistry and Precipitation of Aluminum Phosphate. In *Chemistry of Wastewater Technology*. A.J. Rubin (Ed.), Ann Arbor Science Publisher, Mich., 59.

Grohman, A., *et al.* (1984) Kinetics of Phosphate Precipitation by Means of Iron(III) Salts and the Influence of Calcium Ions. *Vom Wasser* (Ger.), **62**, 171.

Hogfeldt, E. (1983) Stability Constants of Metal-Ion Complexes. IUPAC Chemical Data Series No. 21, Pergamon Press, Oxford, G.B.

Hsu, P.H. (1973) Complementary Role of Iron(II), Sulfate and Calcium in Precipitation of Phosphate from Solution. *Environ. Lett.*, **5**, 115.

Jenkins, D., and Hermanowicz, S.W. (1991) Principles of Chemical Phosphorus Removal. In *Phosphorus and Nitrogen Removal from Municipal Wastewater: Principles and Practice*. R.I. Sedlak (Ed.), Lewis Publishers, Chelsea, Mich.

Kavanaugh, M.C., *et al.* (1978) Phosphorus Removal by Post-Precipitation with Fe(iii). *J. Water Pollut. Control Fed.*, **50**, 216.

Leckie, J., and Stumm, W. (1970) Phosphate Precipitation. In *Water Quality Improvements by Physical and Chemical Processes*. Univ. Texas, Austin, 237.

Luedecke, C., *et al.* (1988) Precipitation of Ferric Phosphate in Activated Sludge. *Water Sci. Technol.*, **21**, 325.

Menar, A., and Jenkins, D. (1972) Calcium Phosphate Precipitation in Wastewater Treatment. U.S. EPA Report No. R2-72-064, Washington, D.C.

Rabinowitz, B., *et al.* (1987) Phosphorus Removal in Activated Sludge Systems. Paper presented at IAWPRC Conf., Port Elizabeth, S. Afr.

Recht, H.L., and Ghassemi, M. (1970) Kinetics and Mechanisms of Precipitation and Nature of the Precipitate Obtained in Phosphate Removal from Wastewater Using Aluminum(iii) and Iron(iii) Salts. Federal Water Quality Administration Report No. 17010 EKI 04/70, U.S. Dep. Interior, Washington, D.C.

Smith, R.M., and Martell, A.E. (1976) *Critical Stability Constants*. Vol. 4, Plenum Press, N.Y.

Spiegel, M., and Forrest, T. (1969) Phosphate Removal: Summary of Papers. *J. Am. Soc. Civ. Eng.*, **95**, 803.

Stumm W., and Morgan, J. (1970) *Aquatic Chemistry*. Wiley-Interscience, New York, N.Y.

U.S. Environmental Protection Agency (1987) *Design Manual: Phosphorus Removal.* EPA-625/1-87-001, Cincinnati, Ohio.